Lecture 1

- Introduction to Electric Circuits
  - Voltage
  - Current
  - Current flow
  - Voltage Sources
  - Voltmeter (Multimeter)
- Lumped circuits.
- Reference directions.
- Kirchhof's current law (KCL).
- Kirchhof's voltage law (KVL).
- Wavelength and dimension of the circuit.

Introduction to Electric Circuits

Here we are going to remind what are:

- **Voltage**
- **Current**
- **Current flow**
- **Voltage Sources**
- **Voltmeter (Multimeter)**

What is Voltage?

V = "Electrical pressure" - measured in *volts.*

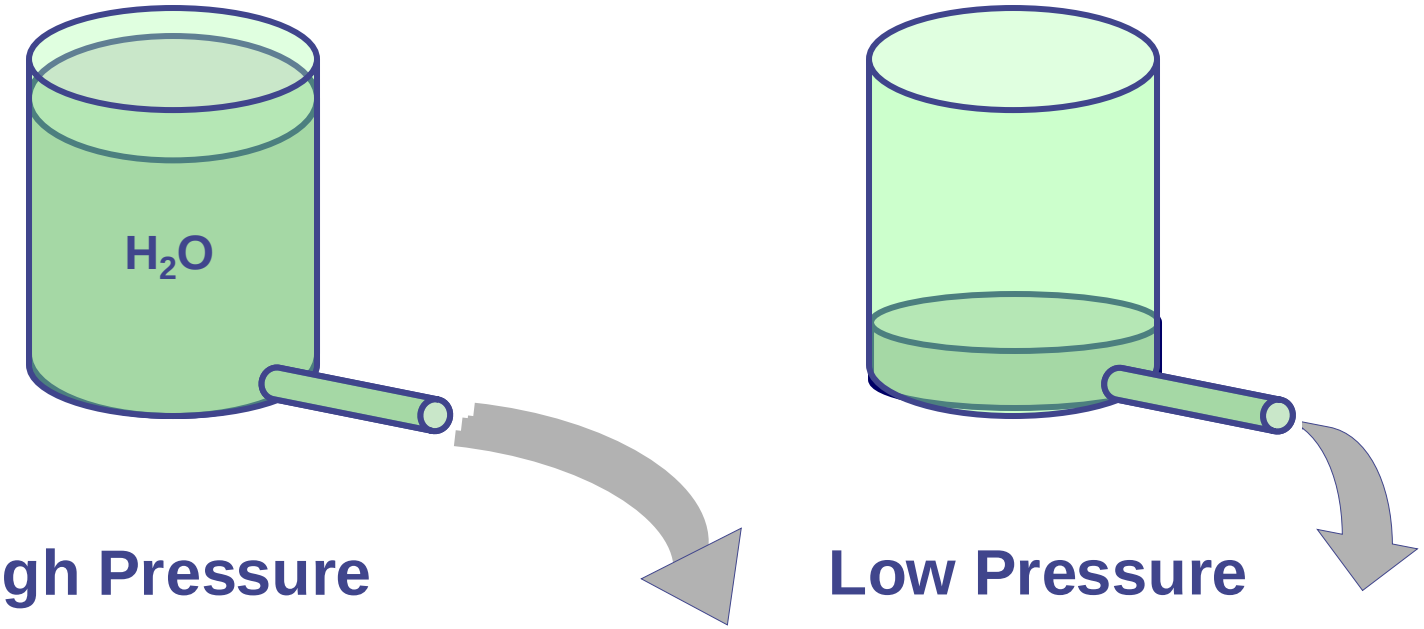

Figure 1.1

A battery in an electrical circuit plays the same role as a pump in a water system.

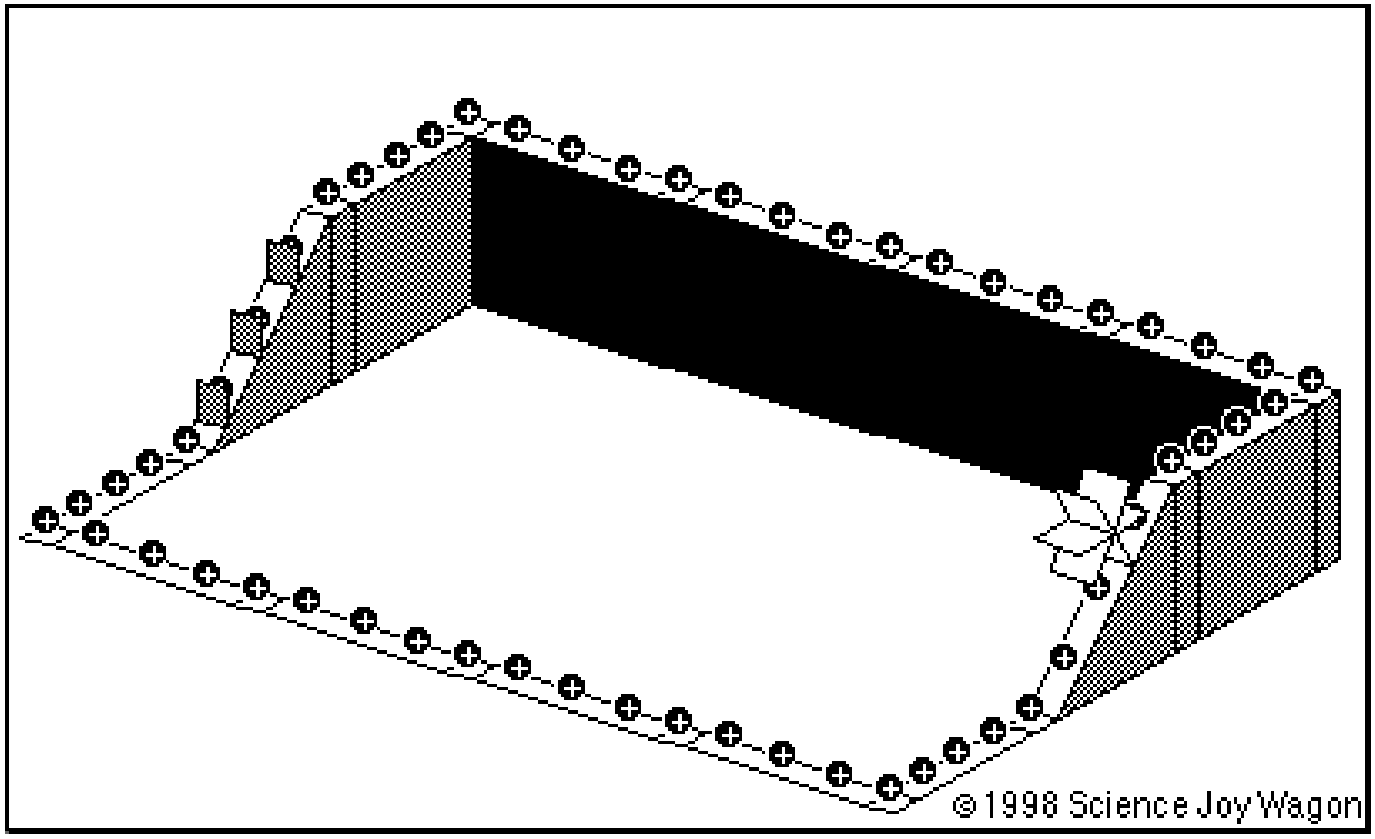

What Produces Voltage?

V = “Electrical pressure”

A Battery

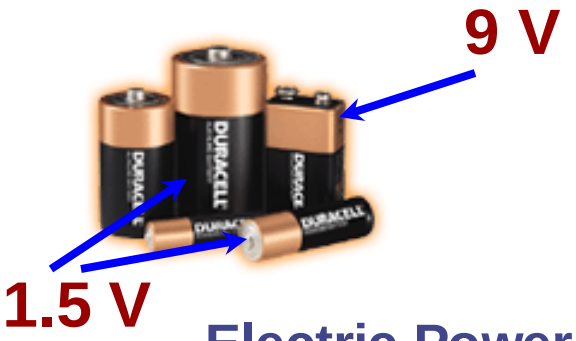

Lab Power Supply



Solar Cell

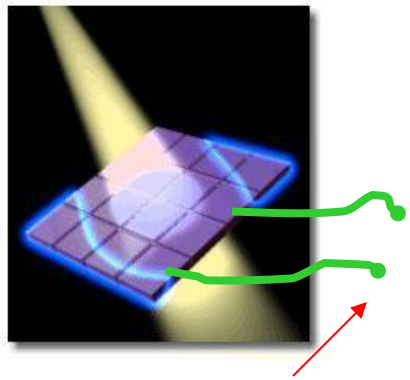

A few Volts

Electric Power Plant



Nerve Cell



A few **millivolts** when activated by a synapse

Other Symbols Used for Specific Voltage Sources

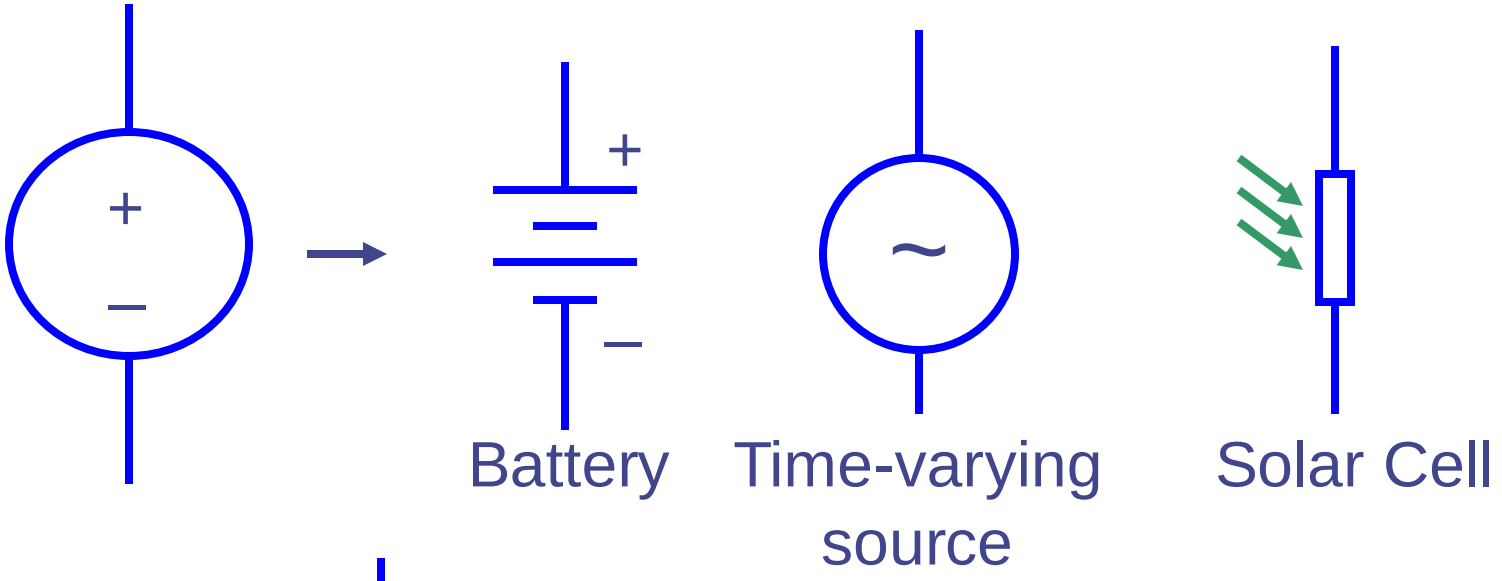

Battery

Time-varying source

Solar Cell

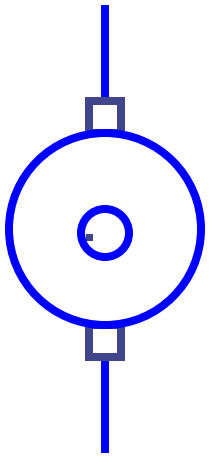

Generator (power plant)

These are all…

Voltage Sources

Figure 1.2

A Typical Voltage Source

Lab Power Supply

This supply goes up to 10 V

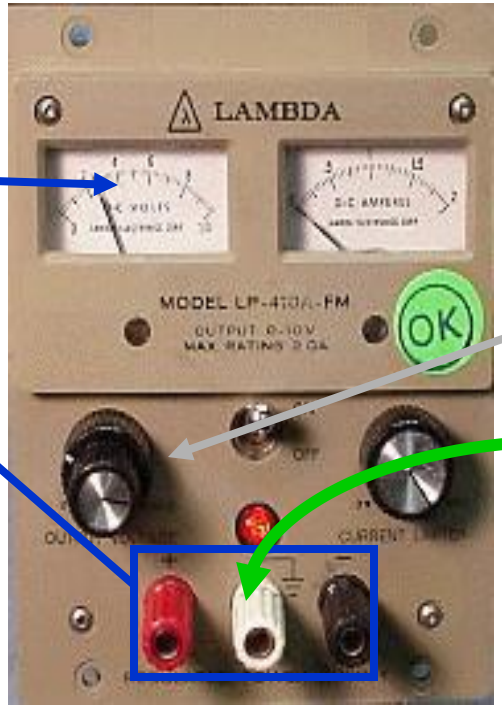

The voltage is adjustable via this knob

The red (+) and black (-) terminals emulate the two ends of a battery.

The white terminal is connected to earth ground via the third prong of the power cord

Remember: **A voltage is measured between two points**

Measuring Voltages

We can measure voltage *between* two points with a *meter*

- Set the meter to read **Voltage**
- Connect the V of the meter to power supply **red**
- Connect COM (common) of the meter to power supply **black**
- Read the Voltage

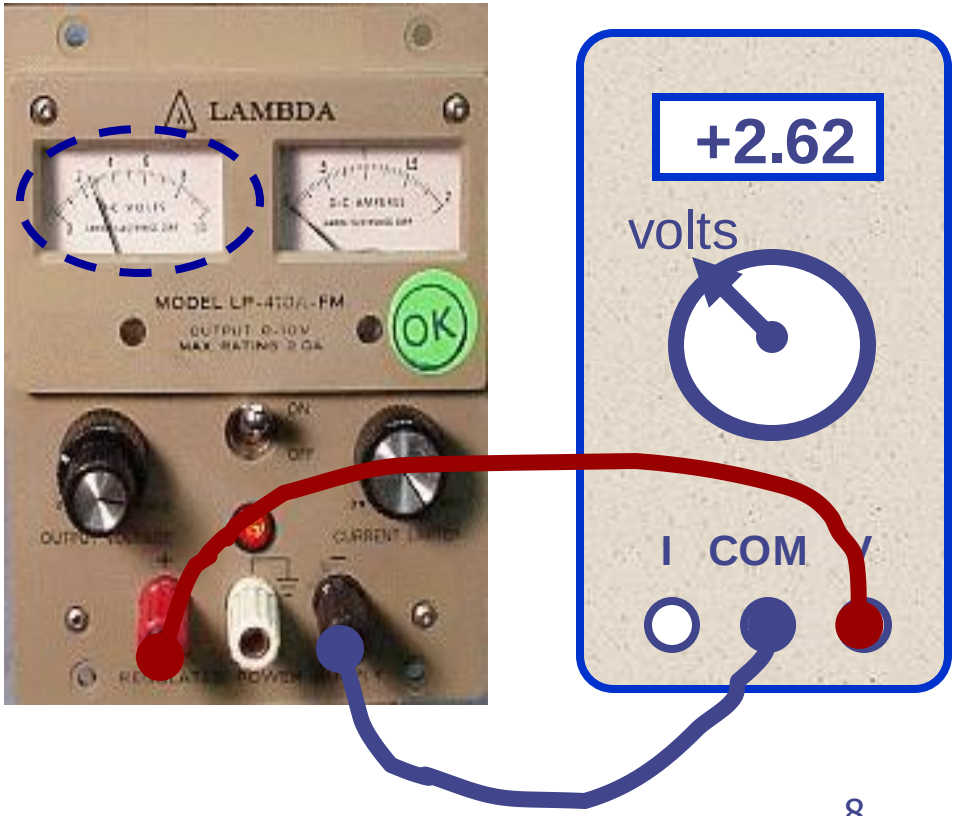

Exercise

The power supply is changed to 3.2 V. What does the meter read?

What's the answer?

Find out

Answer: –3.2 V

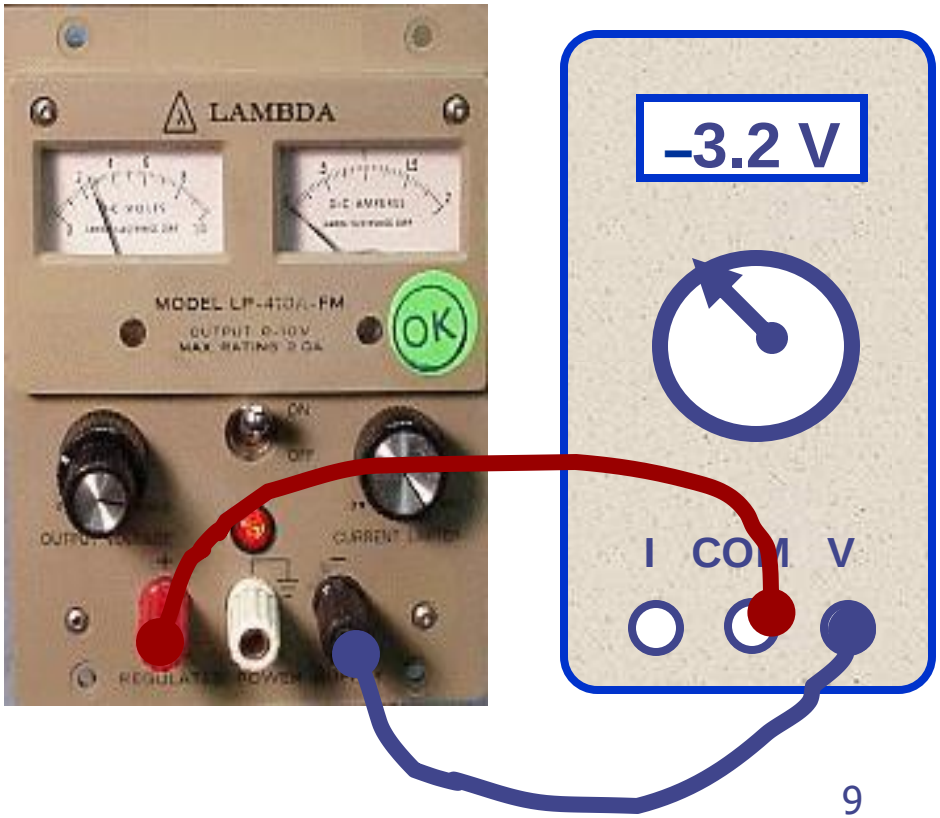

What is “Ground”

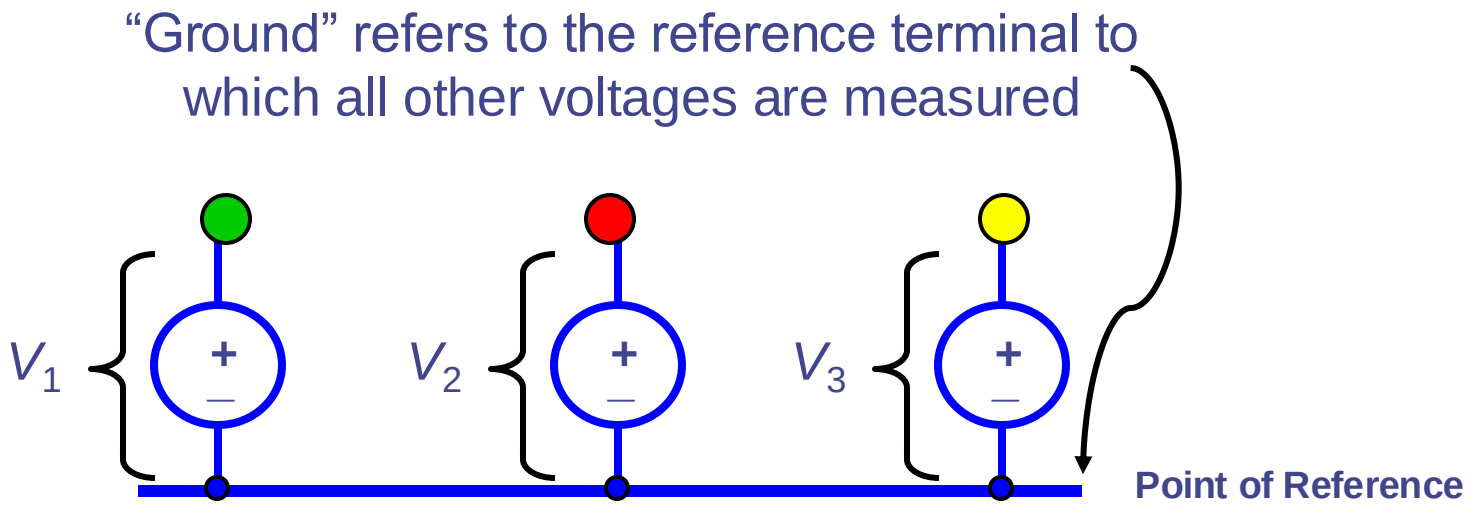

Figure 1.3



The earth is really just one big ground node.

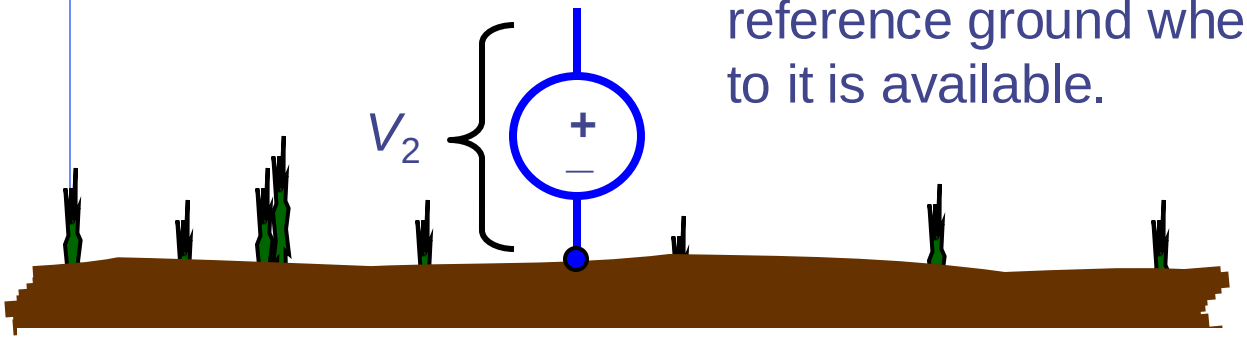

Most people choose the earth as the reference ground when a connection to it is available.

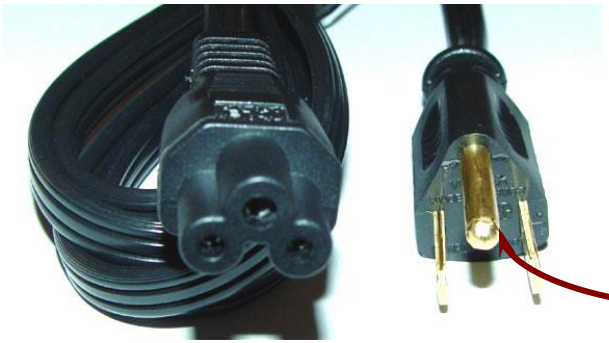

A ground connection to earth is often made via the third prong of a power cord.

Ground Symbol

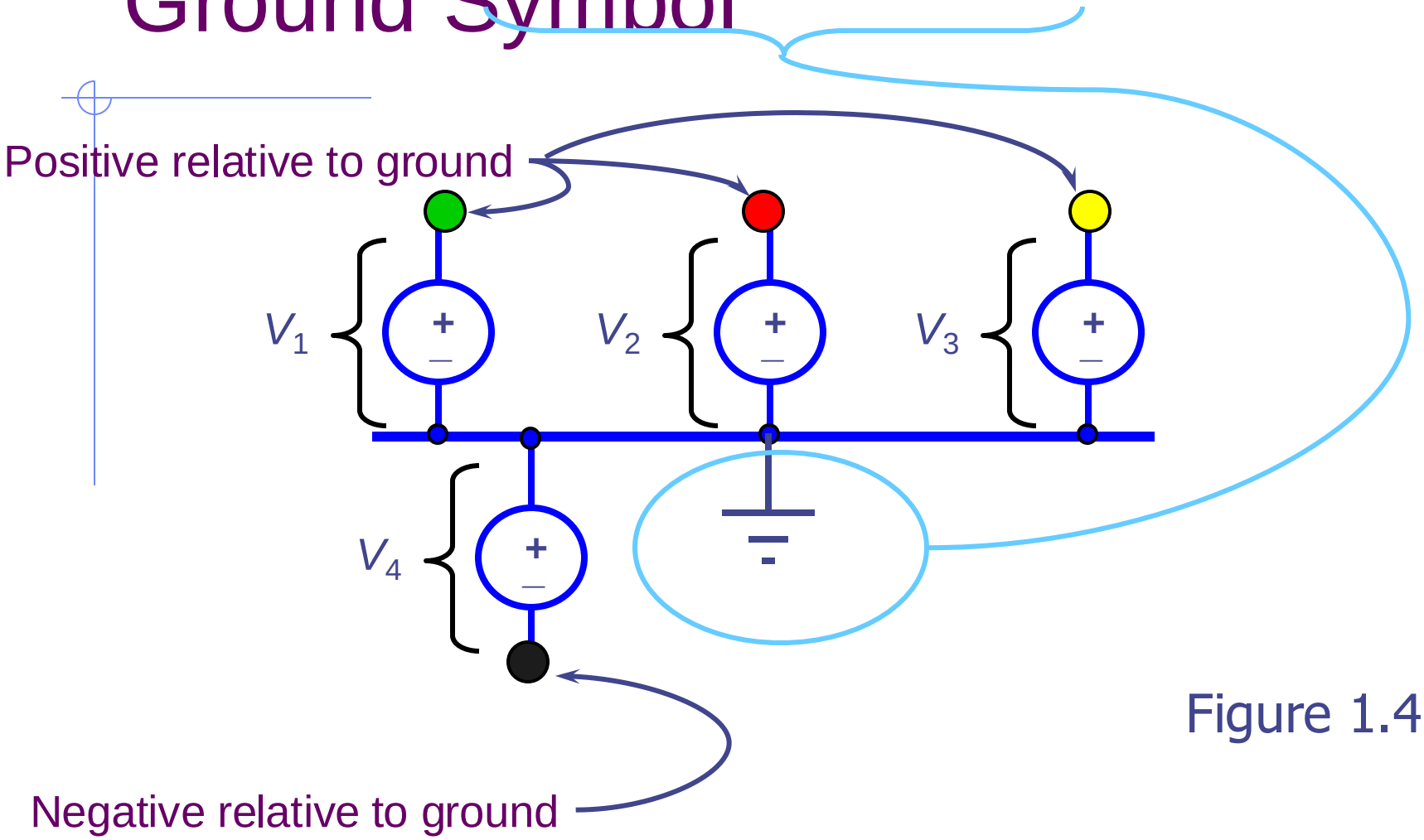

Figure 1.4

Voltage Relative to Ground

The white terminal is connected to earth ground

Connect the black terminal to ground



The red terminal is positive with respect to "ground"

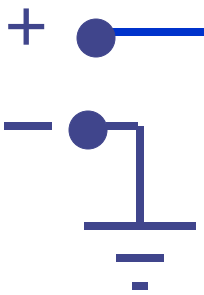

Negative Polarity Relative to Ground



The black terminal is negative with respect to ground.

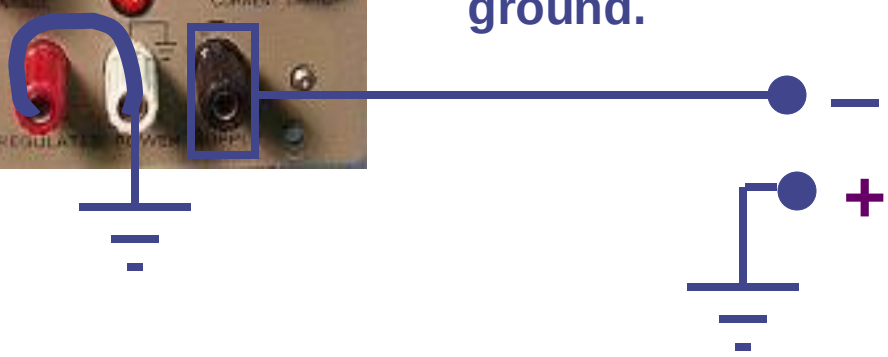

What is Current?

- Current is the **flow of charge** from a voltage source
- 1 Ampere (“Amp”) = Flow of 1 Coulomb/sec

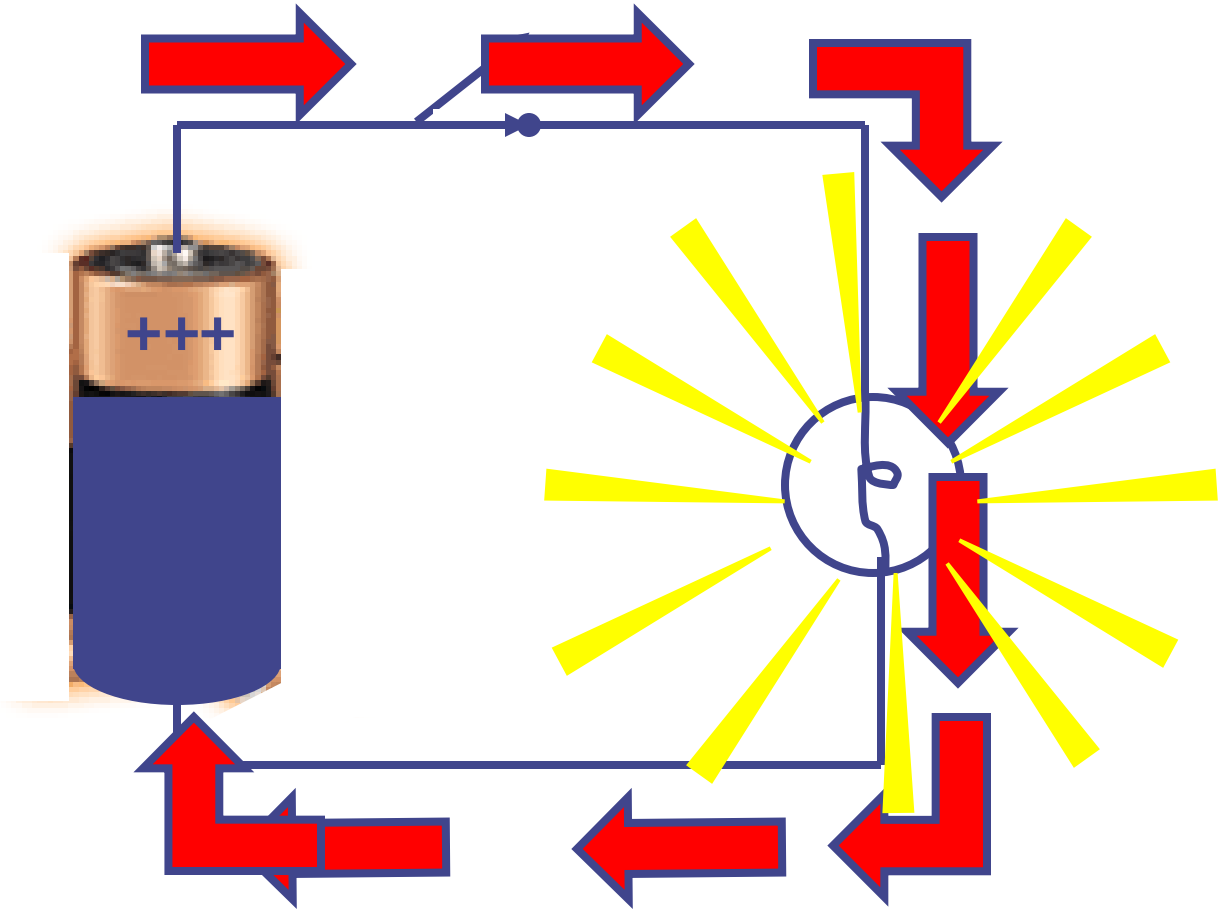

How Does Current Flow?

Current can only flow through conductors

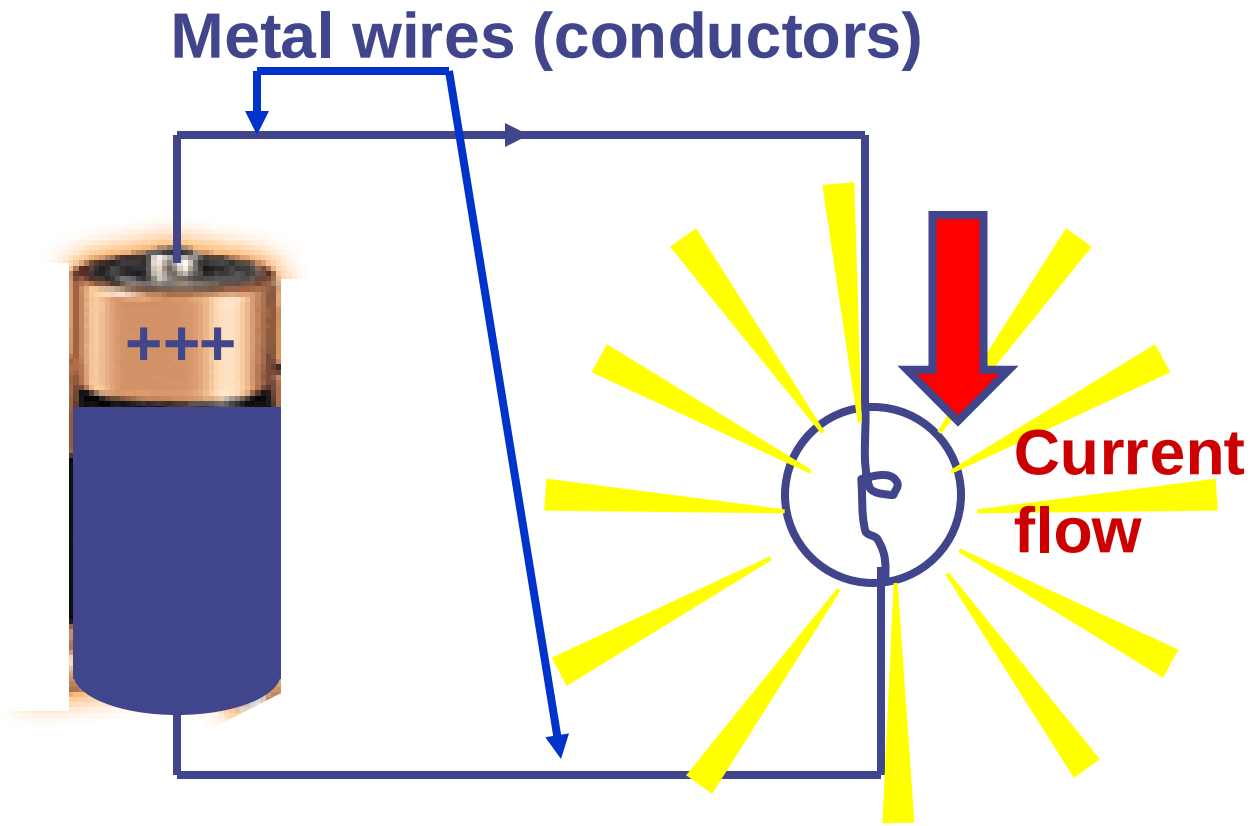

When Does Current *NOT* Flow?

Current cannot flow through insulators

Plastic material (insulators)

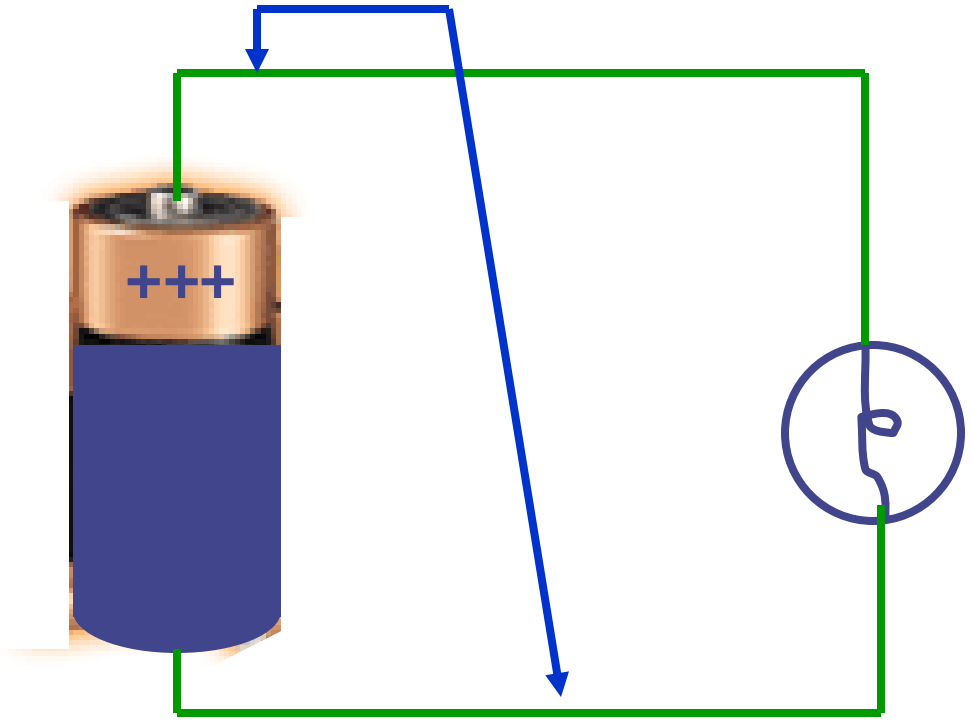

No current flow

Note that Air is an Insulator

Current cannot flow through insulators



No current flow

That's why a battery doesn't discharge if left on its own.

What is Current?

- Electricity flows **when electrons** travel through a conductor.
- We call this flow "**current**."
- Only some materials have free electrons inside.

YES! **Conductors:**

silver
copper
gold
aluminium
iron
steel
brass
bronze
mercury
graphite
dirty water
concrete

NO!

Insulators:

glass
rubber
oil
asphalt
fiberglass
porcelain
ceramic
quartz
(dry) cotton
(dry) paper
(dry) wood
plastic
air
diamond
pure water

No free electrons = No current

Current

- Current is the amount of electric charge (coulombs) flowing past a specific point in a conductor over an interval of one second.

  1 ampere = 1 coulomb/second

- Electron flow is from a lower potential (voltage) to a higher potential (voltage).

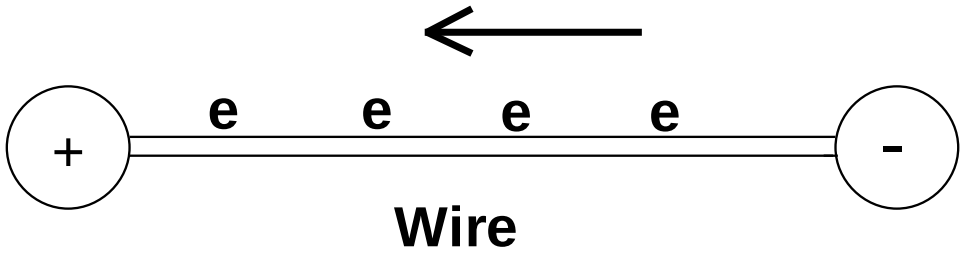

Current

- For historical reasons, current is conventionally thought to flow from the positive to the negative potential in a circuit.

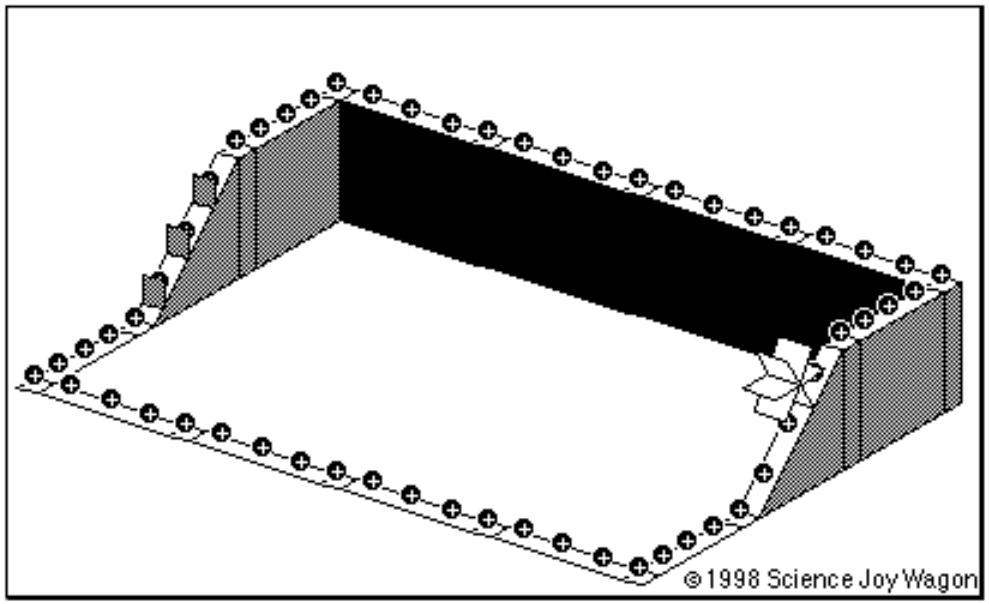

Formal Definition of Current Flow

- Rate of flow of “positive” charge
- Measured in **Coulombs per second** of charge
- (It’s really the electrons flowing in the opposite direction)

1 Ampere = 1 Coulomb of electrons flowing by per second in the wire

Sign Convention for Current Flow

- Electrons carry negative charge
- Positive current flow is in opposite direction

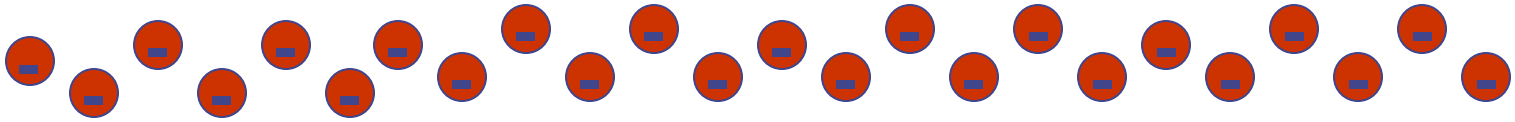

electron motion

positive current direction

Reference Direction

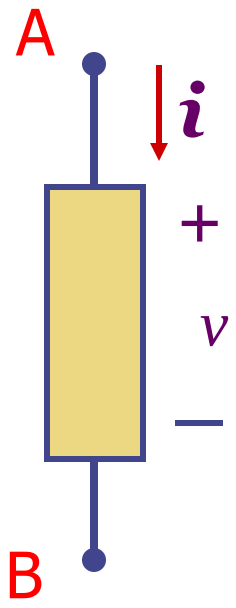

Consider any two-terminal lumped element with terminals A and B as shown in Figure 1. It may be a resistor, inductor or diode. To suggest this generally , we refer to the two-terminal element as a *branch*.

The reference direction for the voltage is indicated by the plus and minus symbols located near terminals *A* and *B*. The reference direction for current is indicated by the arrow.

Given the reference direction for the voltage shown in Fig. by convention *the branch voltage v is positive at time t* (that is, $v(t)>0$) whenever the electrical potential of *A* at time *t* is larger than the electrical potential of *B* at time *t*.

$$v(t) = v_A(t) - v_B(t) \qquad (1.1)$$

Associated reference direction

Power Flow

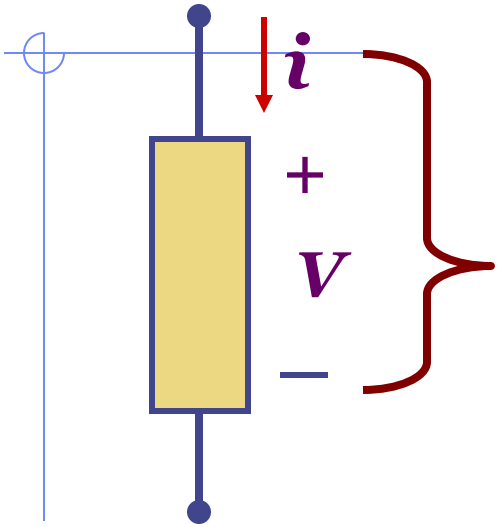

The current variable i is defined as positive into the (+) terminal of the element

"Passive" sign convention

$P = V i$

If the *physical* current is positive Power flows ***into*** the element)

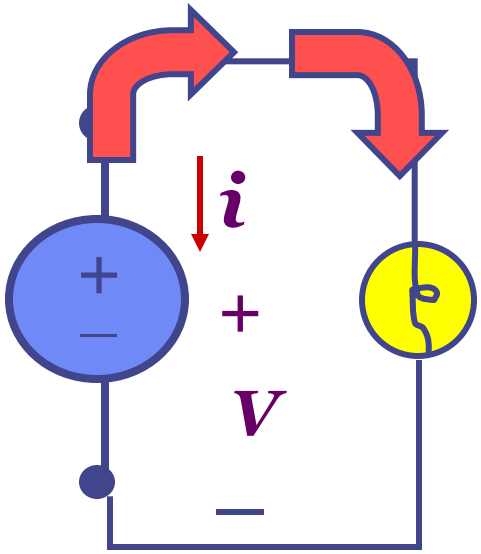

The current variable i is defined as positive into the (+) terminal of the element

$P = V i$

Here the physical current is negative Power flows ***out of*** the source

Lumped circuits

Lumped circuits are obtained by connecting lumped elements

Typical lumped elements are

- resistors,
- capacitors,
- inductors and
- transformers

The key properties associated with lumped elements is their small size (compared to the wavelength corresponding to their normal frequency of operation).

From the more general electromagnetic field point of view, lumped elements are point singularities; that is they have negligible physical dimensions.

Network Topology

- An interconnected set of electrical components is called a **network**.

- Each component of a network is called an **element**.

- Elements are connected by **wires**.

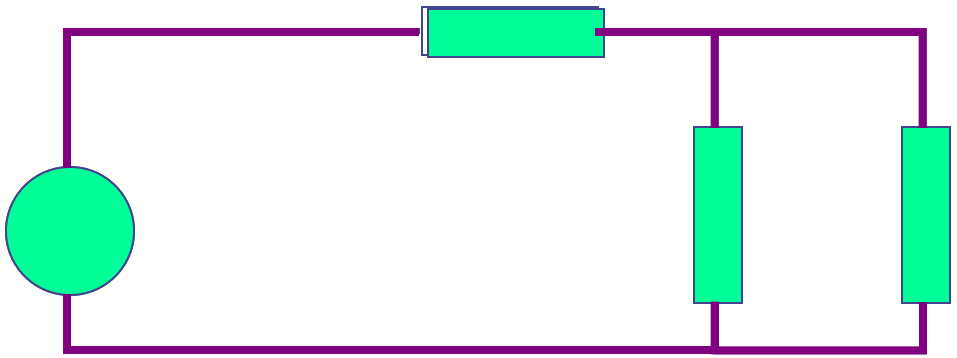

Nodes and Branches

- The interconnections between wires are called **nodes**.
- The wire paths between nodes are called **branches**.

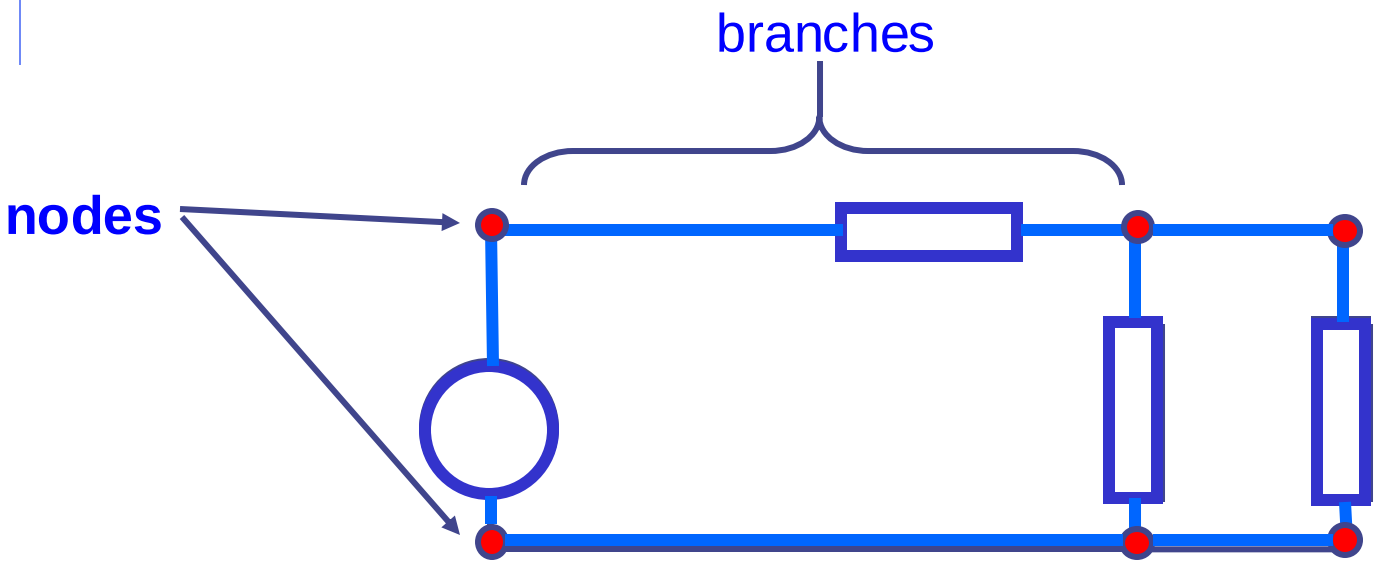

Nodes Connected by Wires Only

- Two or more nodes connected just by wires can be considered as one single node.

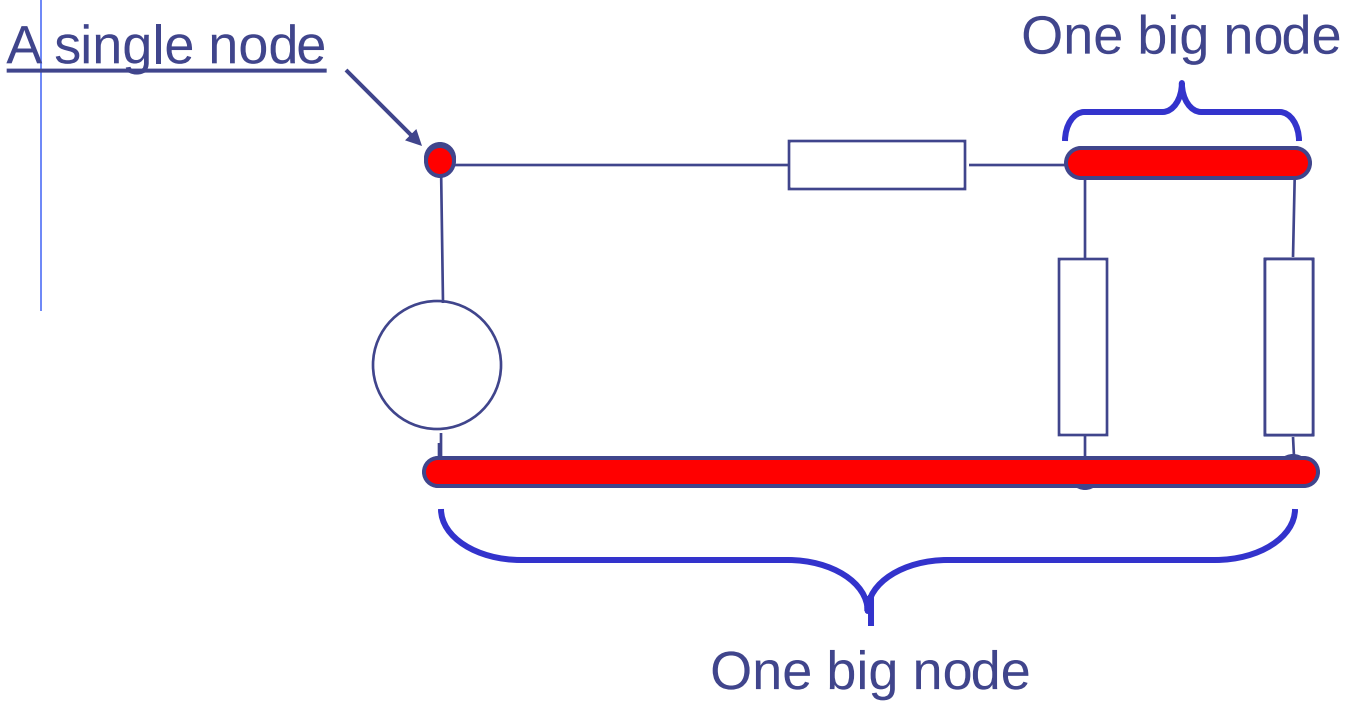

This network as **three** nodes

Current Flow

- Current can flow through the branches of a network.
- The direction of current flow is indicated by an arrow.

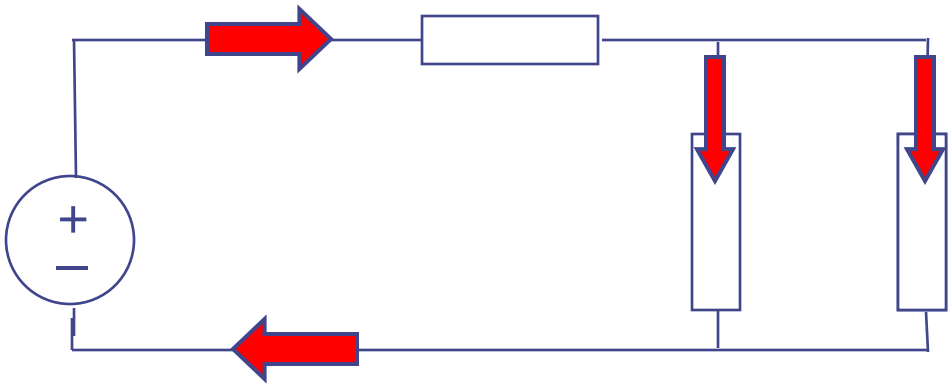

- Note: The **voltage sources** in the network drive the flow of current through its branches. (More on this idea later.)

Every Current has a Value and a Direction

- The direction is defined by the person drawing the network.
- The value is determined by the properties of the circuit.

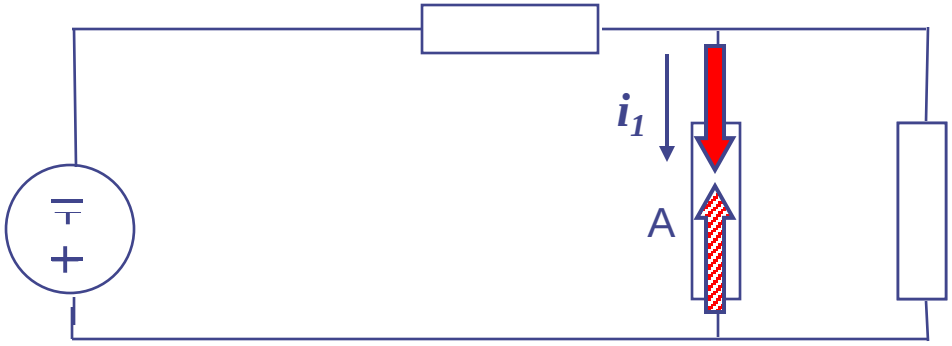

Example:

The arrow above defines "positive" current flow i_1 as downward in branch A.

Suppose that 4 mA of current flows physically downward in branch A. Then $i_1 = 4$ mA.

Converse:

Suppose that 4 mA of current flows physically upward in branch A. Then $i_1 = -4$ mA.

Kirchhoff's Current Law

- The sum of currents flowing **into** a node must be balanced by the sum of currents flowing **out** of the node.

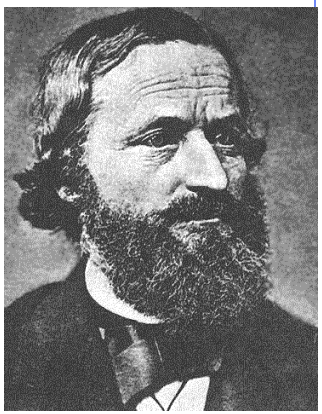

Gustav Kirchoff was an 18th century German mathematician

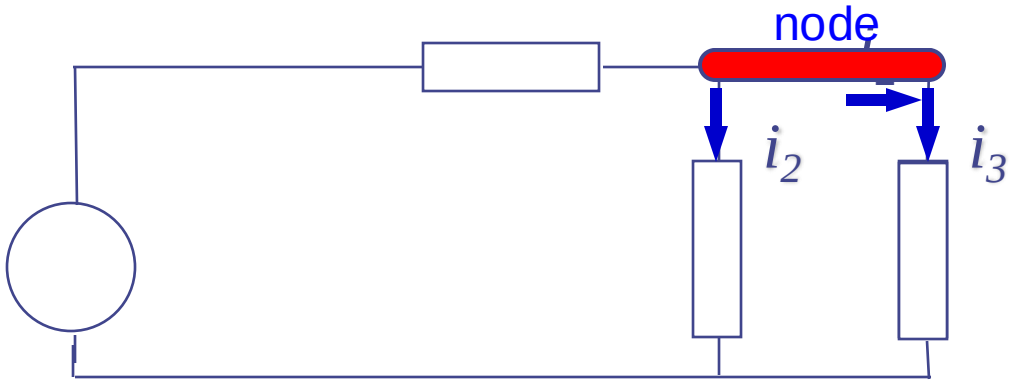

i_1 flows **into** the node

i_2 flows **out** of the node

i_3 flows **out** of the node

$$i_1 = i_2 + i_3$$

$$\sum i = 0$$

(1.2)

Kirchhoff's Current Law:

$$i_1 = i_2 + i_3$$

- This equation can also be written in the following form:

$$i_1 - i_2 - i_3 = 0$$

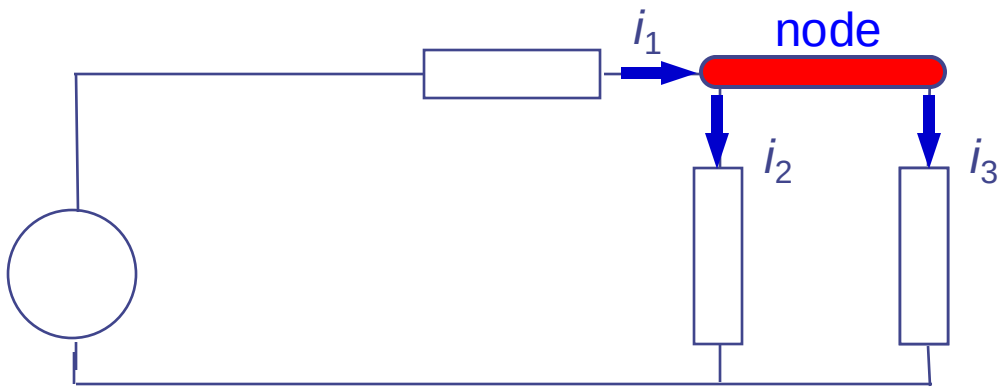

A formal statement of **Kirchhoff's Current Law**:

The sum of *all* the currents **entering** a node is zero.

(i_2 and i_3 **leave** the node, hence currents $-i_2$ and $-i_3$ **enter** the node.)

Example 1: Kirchhoff's Current Law:

Q: How much is the current I_o ?

A: $i_o = 2.5\ \text{mA} + 4\ \text{mA} = 6.5\ \text{mA}$

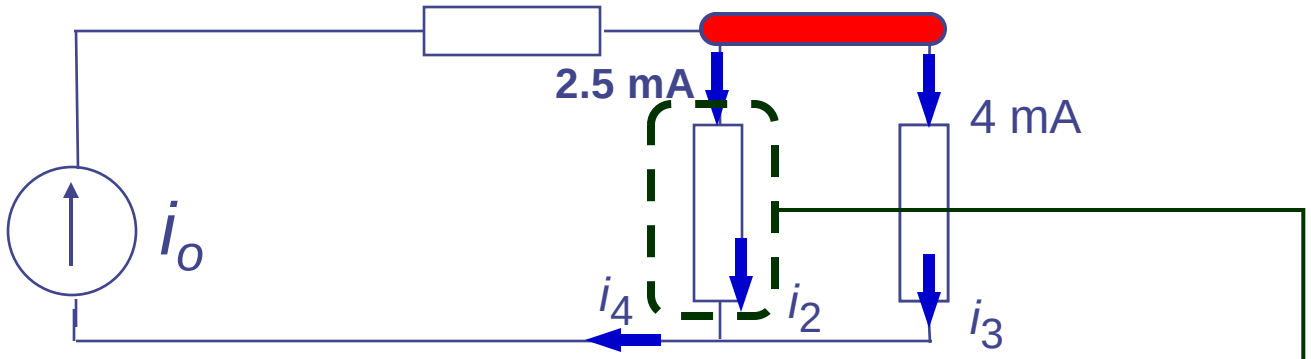

- Note that a "node" need not be a discrete point
- The dotted circle is a node with 2.5 mA entering
- Hence i_2 = 2.5 mA exits the "node".
  Similarly, i_3 = 4 mA.
- From KCL, $i_4 = i_2 + i_3 = 6.5$ mA, and $I_o = i_4$

Example 2: Kirchhoff's Current Law:

Q: How much are the currents i_1 and i_2 ?

A: $i_2 = 10\text{ mA} - 3\text{ mA} = 7\text{ mA}$

$i_1 = 10\text{ mA} + 4\text{ mA} = 14\text{ mA}$

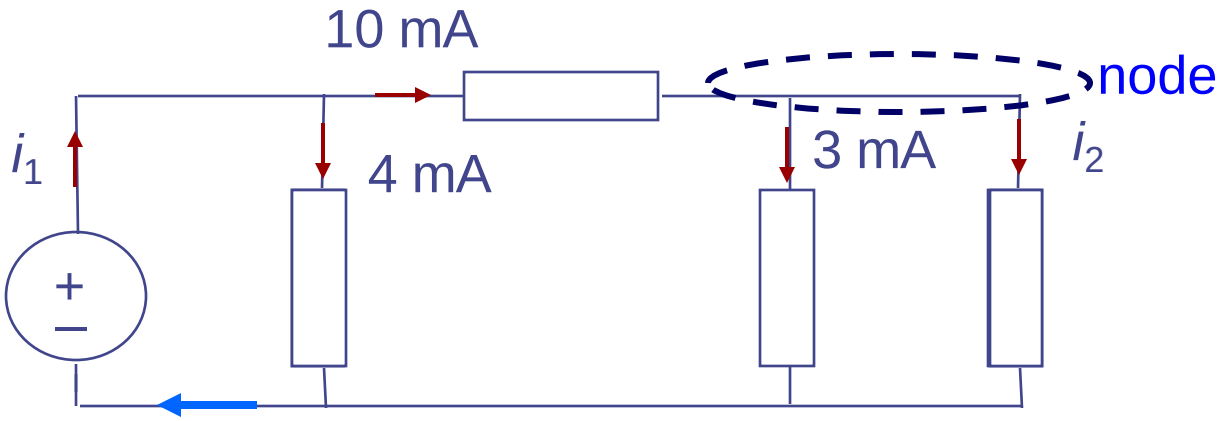

4 mA + 3 mA + 7 mA = 14 mA

Sometimes Kirchhoff's Current Law is abbreviated just by

KCL

Review: Different ways to state KCL:

- ✓ The sum of *all* currents **entering** a node must be zero.
- ✓ The net current entering a node must be zero.
- ✓ Whatever flows into a node must come out.

more to follow…

General View of Networks

A network is an **interconnection** of elements via nodes and branches

There are many kinds of networks:

Elements	Network	Connection Paths
•Electrical components	Circuit	Wires
•Computers	Internet	Fiber Optics
•Organs	Circulatory System	Blood Vessels

Kirchoff's Current Law applies to all these kinds of networks!

Kirchhoff's Current Law applies to all types of networks

Fiber optic network (***I*** is **light intensity**)

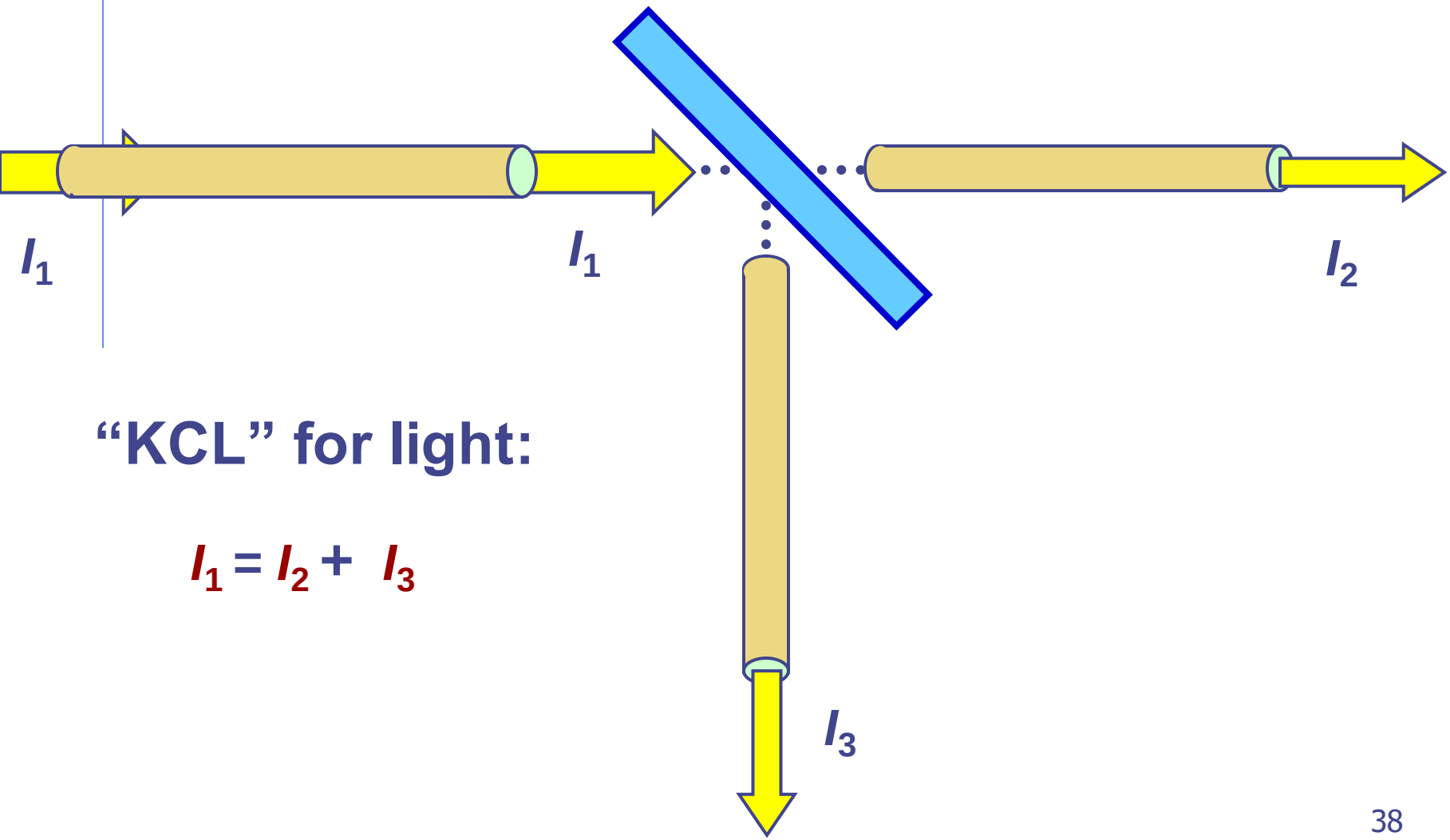

"KCL" for light:

$$I_1 = I_2 + I_3$$

Kirchhoff's Current Law applies to all types of networks

Human Blood Vessels (*f* is **blood flow rate**)

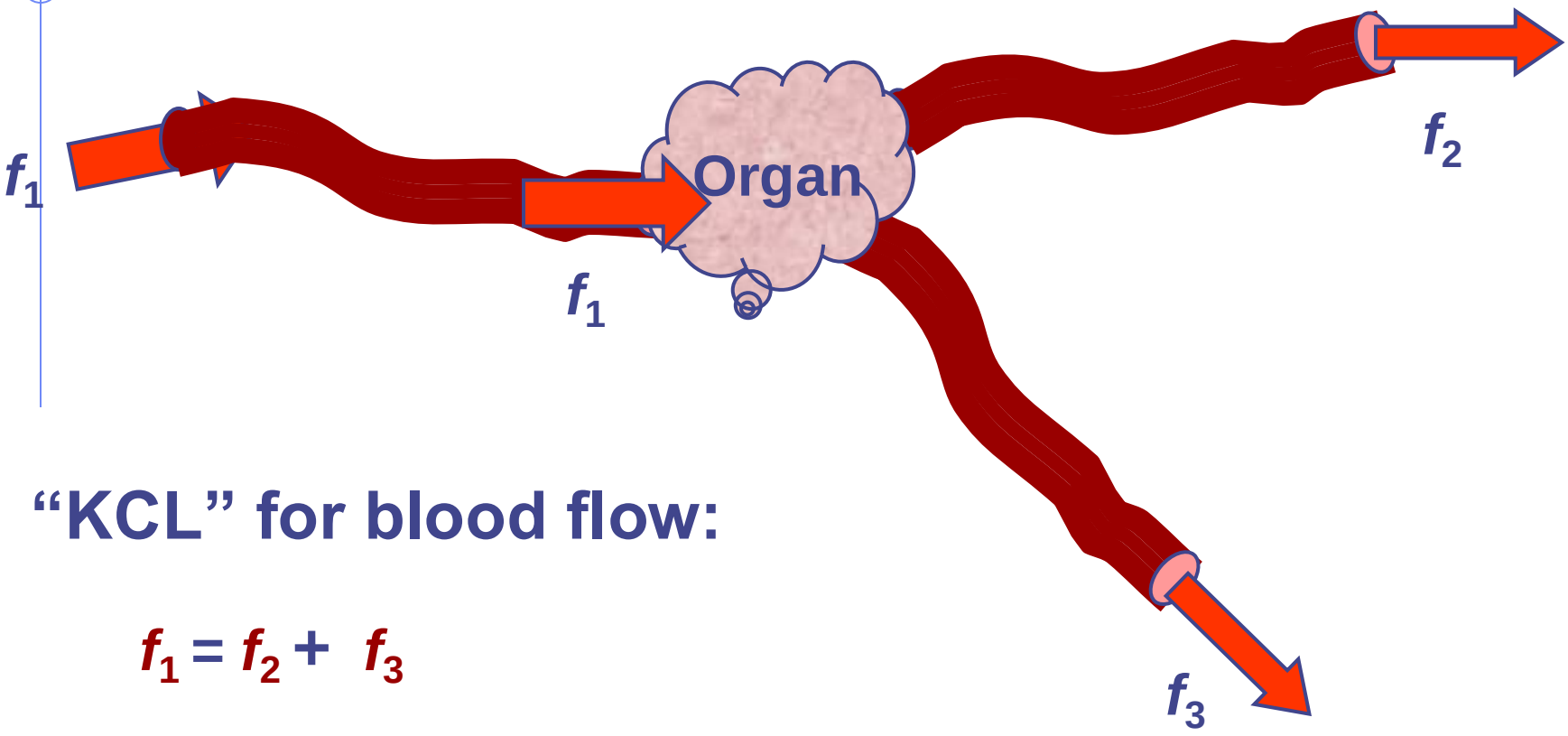

"KCL" for blood flow:

$$f_1 = f_2 + f_3$$

Voltage

- **Voltages** are measured *across* the branches of a network, from one node to another.
- The **direction** of a voltage is indicated by + and – signs.

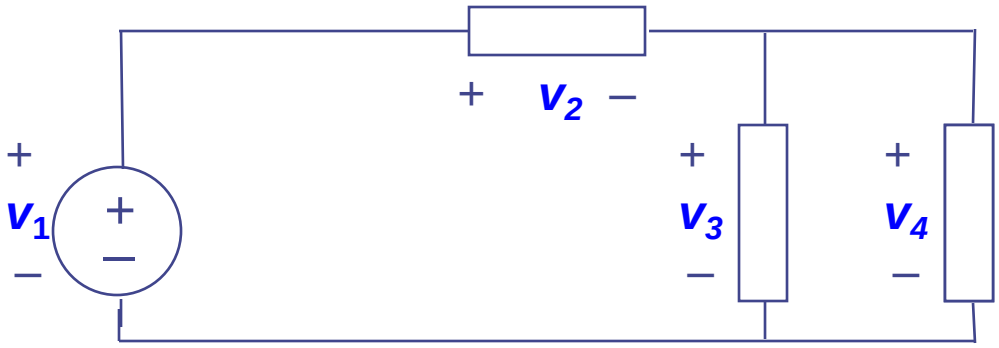

- Remember: The **voltage sources** in the network drive the flow of current through the branches.

Every Voltage has a Value and a Polarity

- The polarity is defined by the person drawing the network.

- The value is determined by the properties of the circuit.

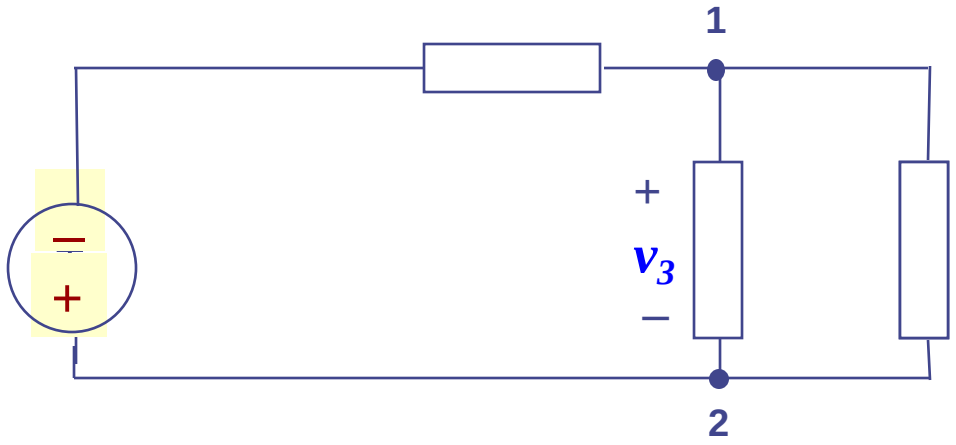

Example:

The plus and minus signs above define the polarity of v_3 as "positive" from node 1 to node 2.

Suppose that +5 V appears physically from node 1 to node 2 . Then $v_3 = 5$ V.

Converse:

Suppose that +5 V appears physically from node 2 to node 1 . Then $v_3 = -5$ V.

Kirchhoff's Voltage Law

The voltage measured between any two nodes does not depend of the path taken.

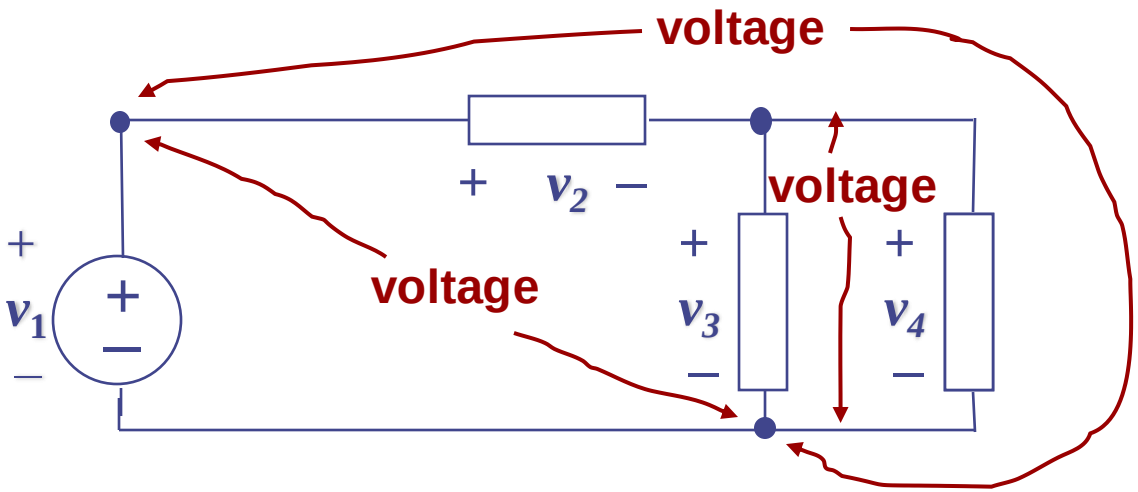

Example of KVL: $v_1 = v_2 + v_3$

Similarly: $v_1 = v_2 + v_4$

and: $v_3 = v_4$

Kirchhoff's Voltage Law:

$$v_1 = v_2 + v_3 \qquad (1.3)$$

- This equation can also be written in the following form:

$$-v_1 + v_2 + v_3 = 0$$

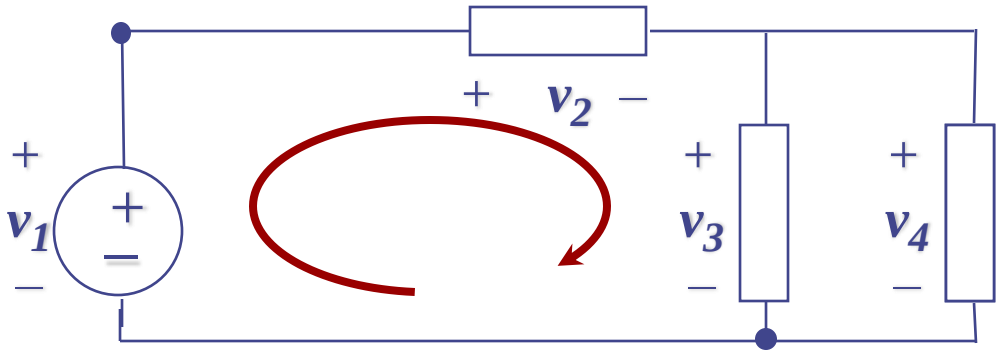

A formal statement of **Kirchhoff's Voltage Law**:

The sum of voltages around a **closed loop** is zero.

Using the Formal Definition of KVL

"The sum of voltages around a closed loop is zero."

- Define an arrow direction around a closed loop.
- Sum the voltages as the are encountered in going around the loop.
- If the arrow first encounters a **plus** sign, enter that voltage with a (+) into the KVL equation.
- If the arrow first encounters a **minus** sign, enter that voltage with a (–) into the KVL equation.

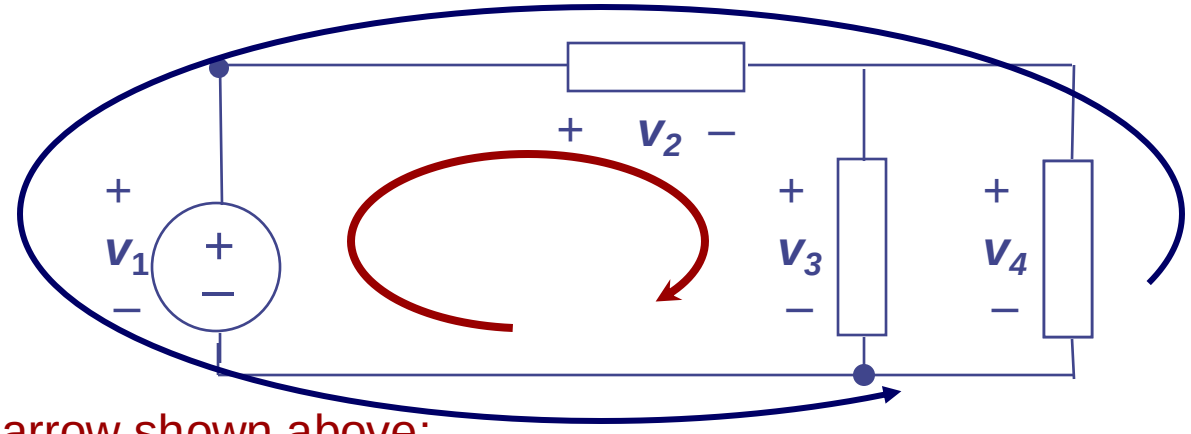

For the arrow shown above:

$$-v_1 + v_2 + v_3 = 0$$

For the outer arrow:

$$-v_4 - v_2 + v_1 = 0$$

Example 1: Kirchhoff's Voltage Law:

Q: How much is the voltage V_o ?

A: $V_o = 3.1\ V + 6.8\ V$

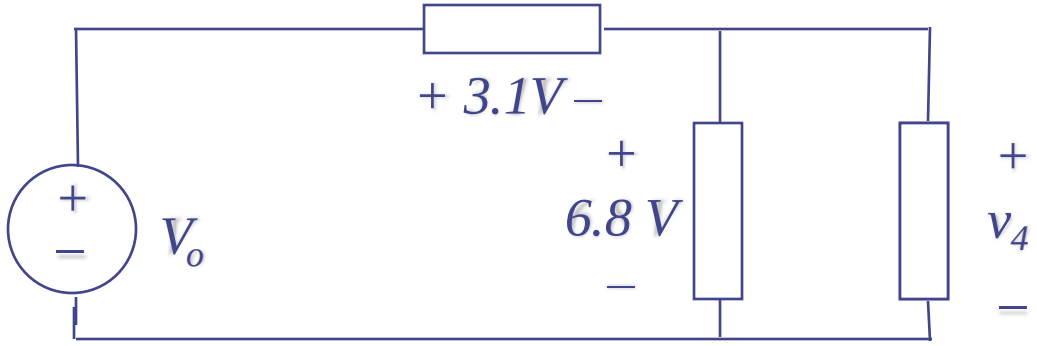

Q: How much is the voltage v_4 ?

A: $v_4 = 6.8\ V$

Example 2: Kirchhoff's Voltage Law:

Q: If v_1 = 10 V and v_5 = 2 V, what are v_2, v_3, and v_4?

A:

$$v_2 = 10 \text{ V}$$
$$v_3 = 10 \text{ V} - 2 \text{ V} = 8 \text{ V}$$
$$v_4 = 2 \text{ V}$$

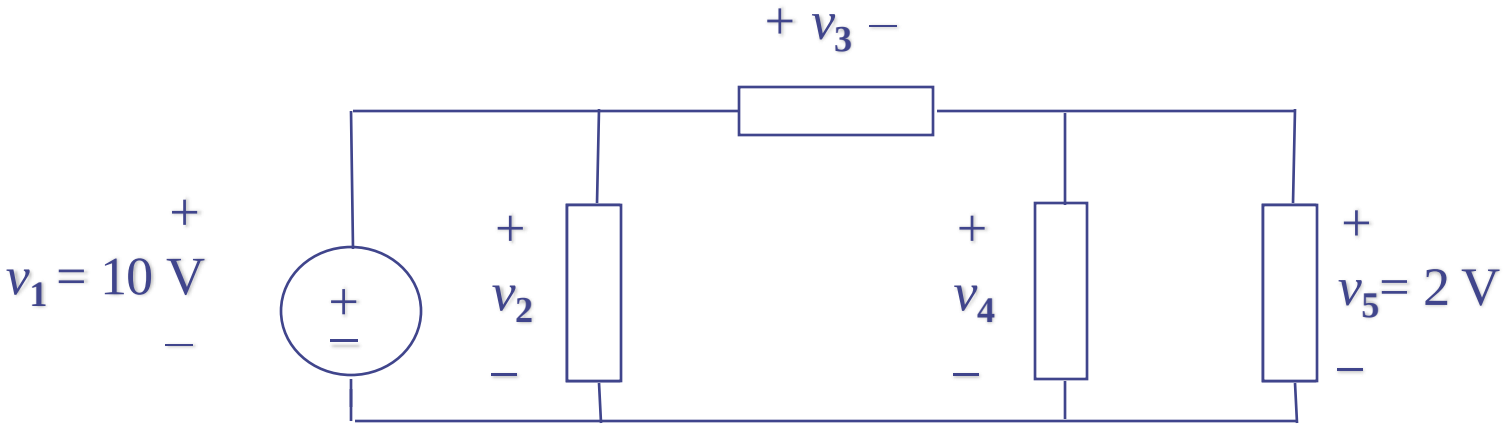

Wavelength and Dimension of the Circuit

What happens when the dimensions of a circuit become comparable to or even larger than the wavelength associated with the highest frequencies of interest?

Let d be the largest dimension of the circuit, c the velocity of propagation of electromagnetic waves, λ the wavelength of the highest frequency of interest, and f the frequency. The condition states that

d is of the order of a larger than λ (1.4)

Now $\tau = d/c$ Is the time required for electromagnetic waves to propagate from one end of the circuit to the other. Since $f\lambda = c,$ $\lambda/c = 1/f = T$ where T is the period of the highest frequency of interest

τ is of the order of a larger than T (1.5)

Thus, recalling the remarks concerning the applicability of *KCL* and *KVL* at high frequencies, we may say that *KCL* and *KVL* hold for any lumped circuit as long as the propagation time of electromagnetic waves through the medium surrounding the circuit is negligible small compared with the period of the highest frequency of interest.

Example

Let us consider a dipole antenna of an FM broadcast receiver and the 300 Ω transmission line that connects it to the receiver.

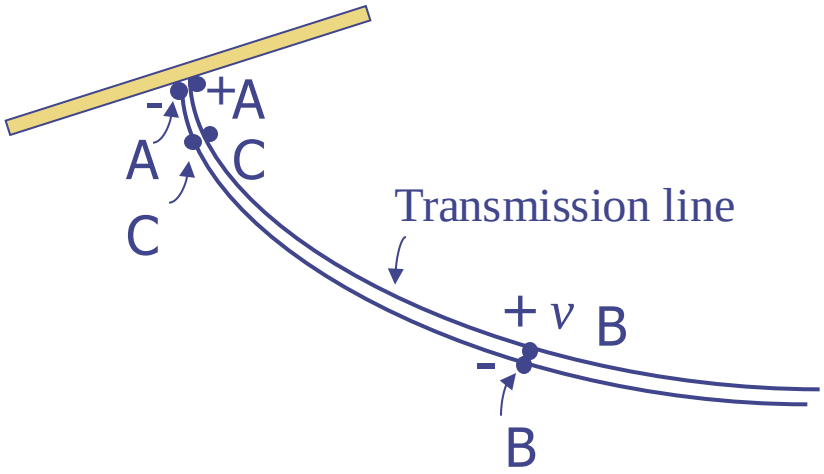

The transmission line consists of two parallel copper wires that are held at a constant distance from one another by simple insulating plastic.

The transmission line is infinitely long to the right.

Summary

1. Kirchhoff's laws and the lumped-element model of a circuit are valid provided that the largest physical dimension of a circuit is small compared with the wavelength corresponding to the highest frequency under consideration

2. KCL states that for any lumped electric circuit, for any of its nodes, and at any time, the algebraic sum of all the branch currents leaving the node is zero

3. KVL states that for any lumped electric circuit, for any of its loops, and at any time, the algebraic sum of all the branch voltages around the loop is zero $\sum_{loop} v_i = 0$

4. Kirchhoff's laws are linear constraints on the branch voltages and branch currents. Furthermore, they are independent of the nature of the elements

Lecture 2

- **Circuit Elements (i).**
- Resistors (Linear)
- Ohm's Law
- Open and Short circuit
- Resistors (Nonlinear)
- Independent sources
- Thevenin and Norton equivalent circuits

Circuit Elements

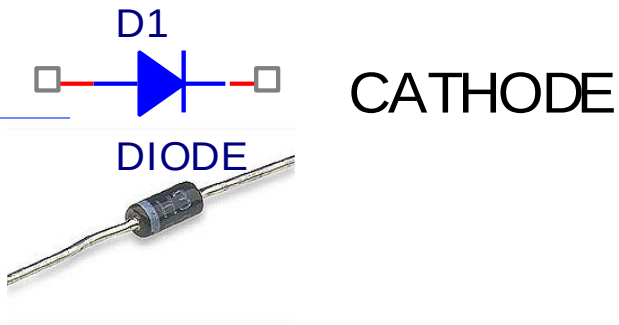

less inductance more inductance

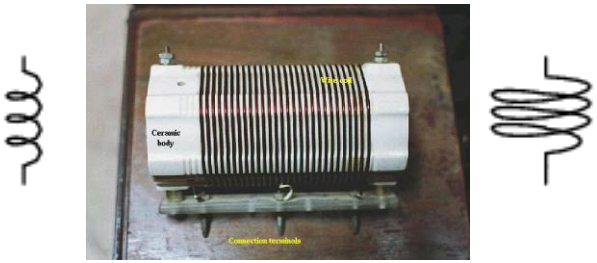

Capacitance





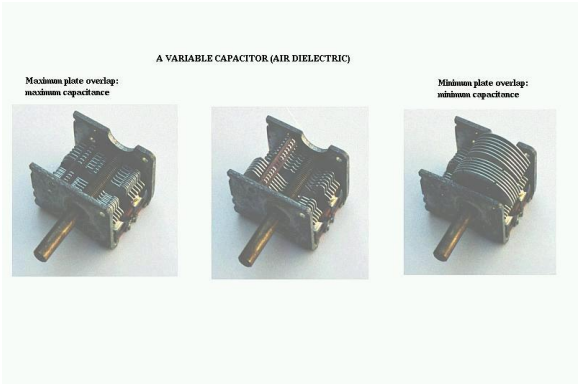

Ohm's Law



Georg Ohm

Let us remind the Ohm's Law

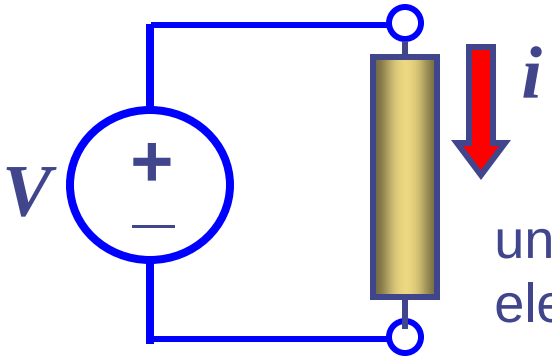

unknown resistive element

- Assume that the wires are "perfect conductors"
- The unknown circuit element limits the flow of current.
- The resistive element has ***conductance G***

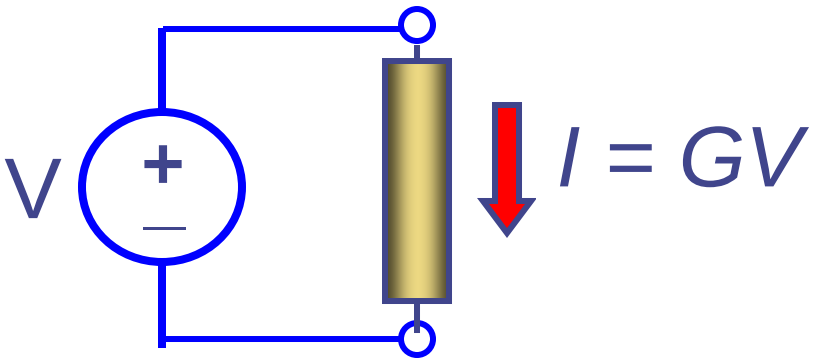

- The voltage source has value V
- The magnitude of the current flow is given by Ohm's Law:

$$I = G\,V \qquad (2.1)$$

conductance

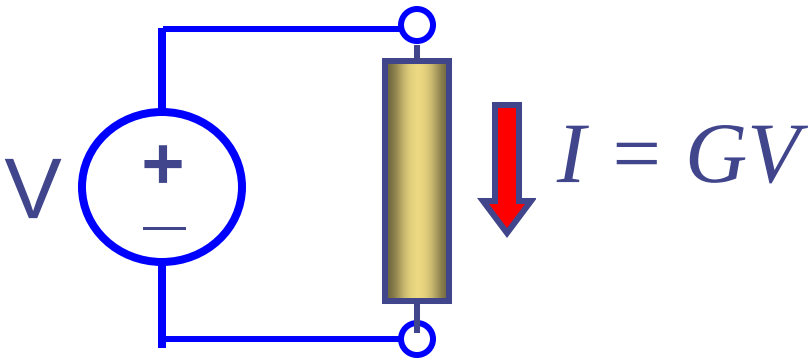

- The ***resistance*** of the element is defined as the reciprocal of the conductance:

$$R = \frac{1}{G} \quad \text{(ohms)}$$

- Ohm's Law is usually written using ***R*** instead of ***G***:

$$I = \frac{V}{R} \qquad (2.2)$$

Three Algebraic Forms of Ohm's Law

$$I = \frac{V}{R}$$

$$V = I\,R \tag{2.3}$$

$$R = \frac{V}{I} \tag{2.4}$$

Resistance Depends on Geometry

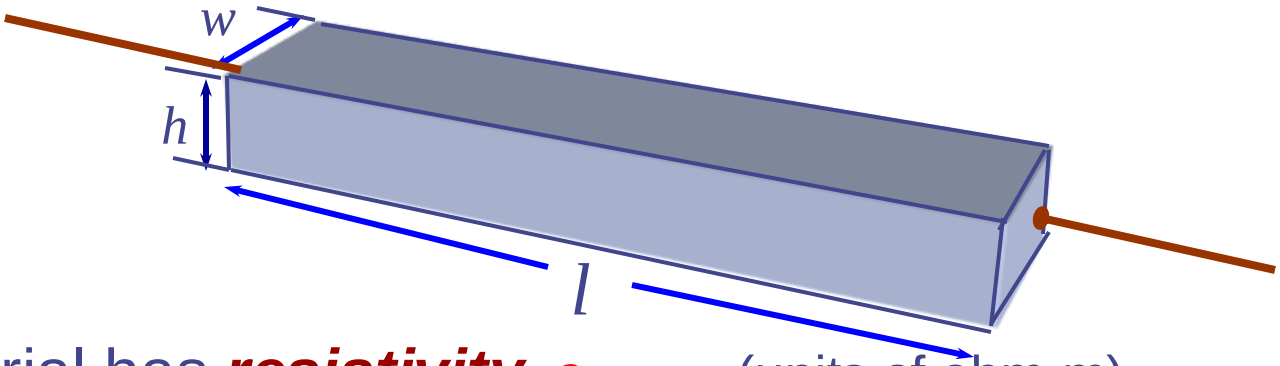

Material has ***resistivity*** ρ (units of ohm-m)

Resistivity is an **intrinsic property** of the material, like it's density and color.

- **When wires are connected to the ends of the bar:**

  Resistance between the wires will be

$$R = \frac{\rho l}{hw} \qquad (2.5)$$

$$R = \frac{\rho l}{hw}$$

The resistance…

- Increases with resistivity ρ
- Increases with length l
- Decreases as the area hw increases

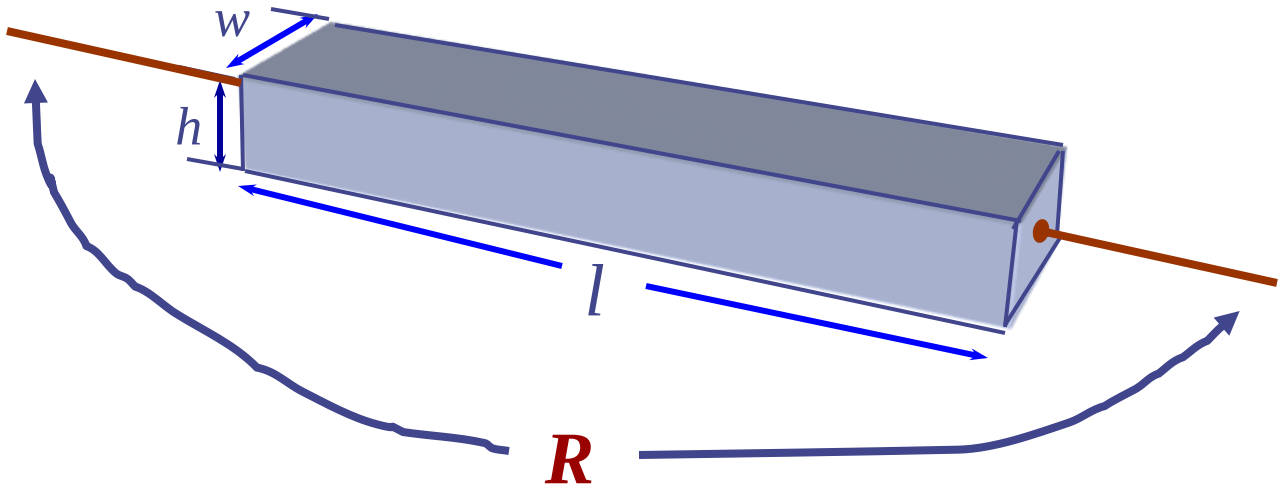

Here is the circuit symbol for a **resistor**

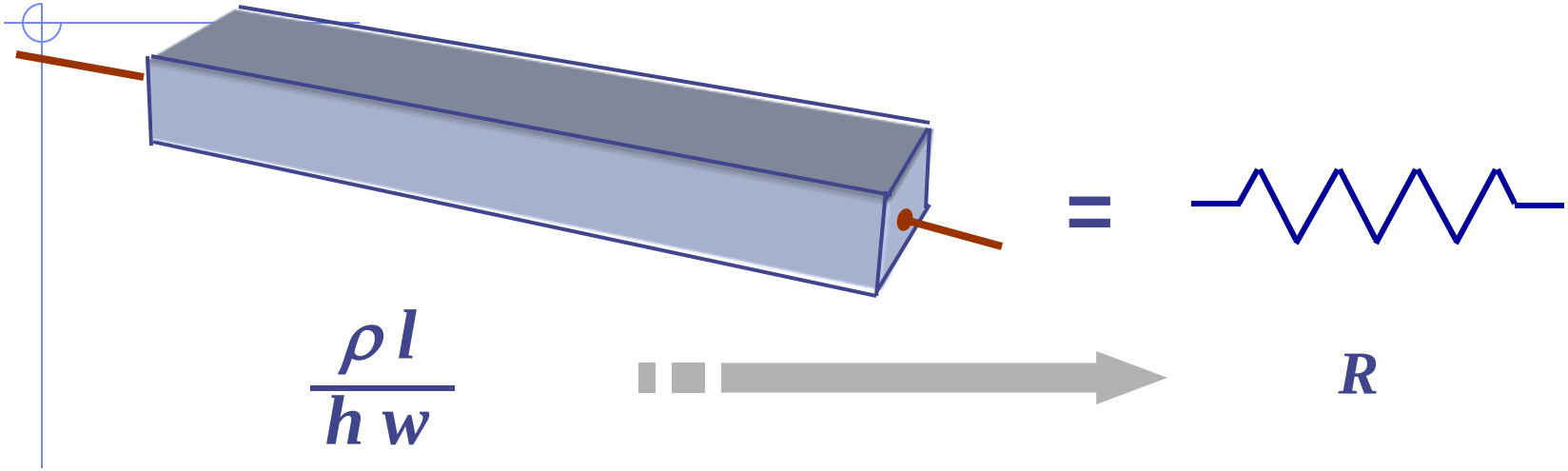

The symbol represents the ***physical*** resistor when we draw a circuit diagram.

A two-terminal element will be called a resistor if at any instant time t, its voltage $v(t)$ and its current $i(t)$ satisfy a relation defined by a curve in the vi plane (or iv plane) This curve is called the *characteristic of resistor at time t*.

The most commonly used resistor is ***time-invariant***; that is, its characteristics does not vary with time

A resistor is called ***time-varying*** if its characteristic varies with time

Any resistor can be classified in four ways depending upon whether it is

a) linear
b) non-linear
c) time-varying
d) time-invariant

A resistor is called ***linear*** if its characteristic is at all times a straight line through the origin

A *linear time-invariant resistor*, by definition has a characteristic that does not vary with time and is also a straight line through the origin (See Fig. 2.1).

Therefore, the relation between its instantaneous voltage $v(t)$ and current $i(t)$ is expressed by Ohm's law as follows:

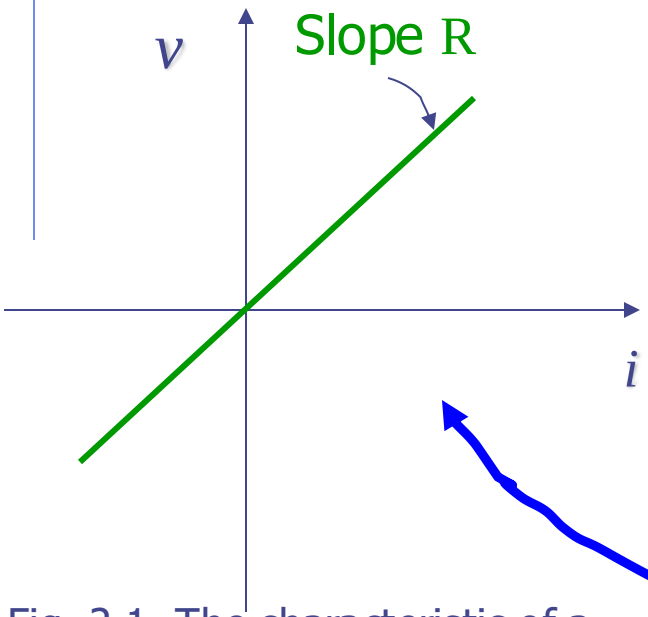

Fig. 2.1 The characteristic of a *linear resistor* is at all times a straight line through the origin; the slope R in the iv plane gives the value of the resistance.

$$v(t) = Ri(t) \quad \text{or} \quad i(t) = Gv(t) \qquad (2.3)$$

R and G are constants independent of i,v and t

The relation between $i(t)$ and $v(t)$ for the *linear time-invariant resistor* is expressed by a *linear function* .

Open and short circuits

A two-terminal element is called an *open circuit* if it has a branch current identical to zero, whatever the branch voltage may be.

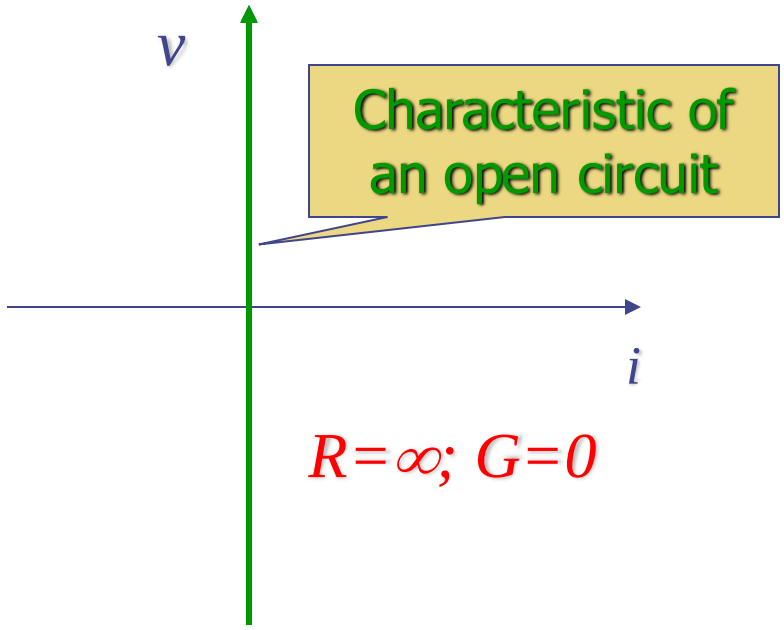

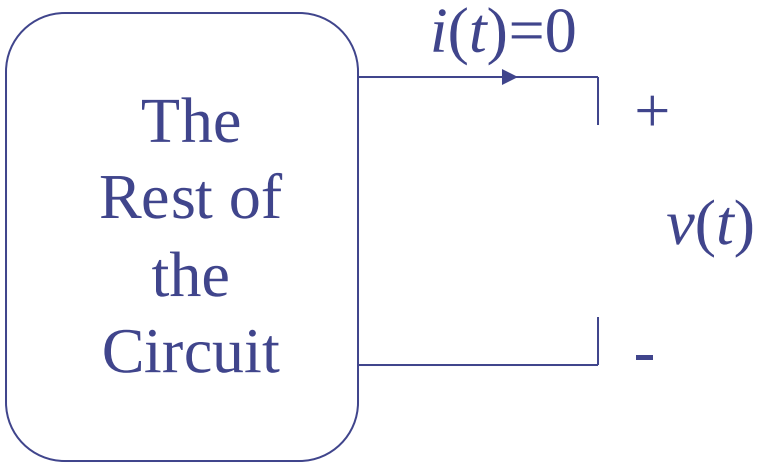

Fig. 2.2 The characteristic of an open circuit coincides with the *v* axis since the current is identically zero

A two-terminal element is called an *short circuit* if it has a branch voltage identical to zero, whatever the branch current may be.

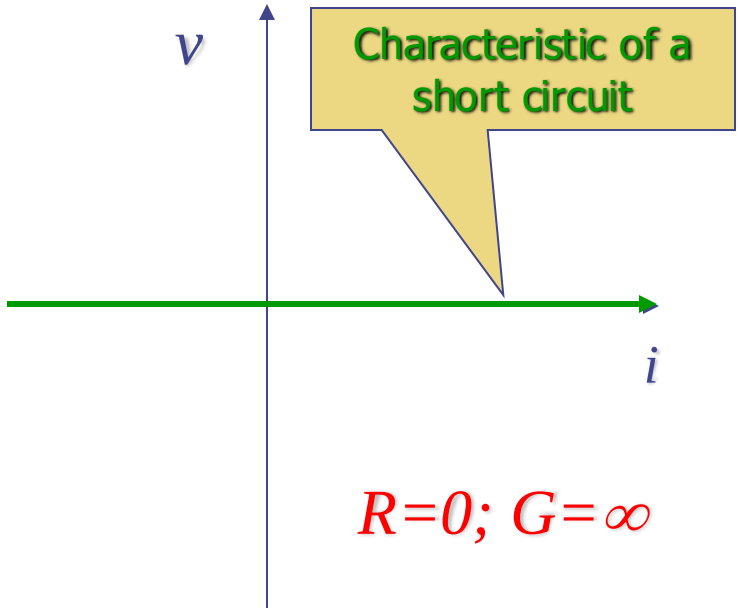

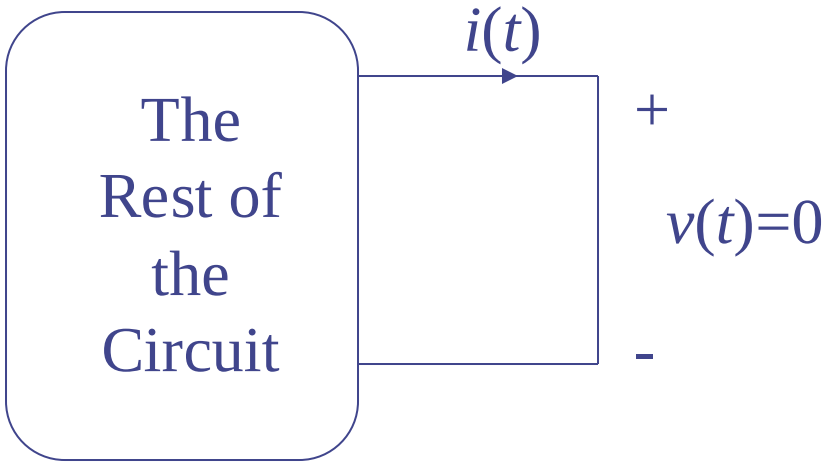

Fig. 2.3 The characteristic of an short circuit coincides with the *i* axis since the voltage is identically zero

Exercise

Justify the following statements by Kirchhoffs laws:

a) A branch formed by the series connection of any resistor $\mathcal{R}$ and an open circuit has the characteristic of open circuit.

b) A branch formed by the series connection of any resistor $\mathcal{R}$ and a short circuit has the characteristic of the resistor $\mathcal{R}$

c) A branch formed by the parallel connection of any resistor $\mathcal{R}$ and an open circuit has the characteristic of the resistor $\mathcal{R}$

d) A branch formed by the parallel connection of any resistor $\mathcal{R}$ and a short circuit has the characteristic of a short circuit

The Linear Time-varying Resistor

The characteristic of a *linear time-varying resistor* is described by the following equations:

$$v(t) = R(t)i(t) \quad \text{or} \quad i(t) = G(t)v(t) \tag{2.4}$$

where $R(t) = 1/G(t)$

The characteristic obviously satisfies the linear properties, but it changes with time

Let us consider for example a linear time varying resistor with sliding contact of the potentiometer that is moved back or forth by servomotor so that the characteristic at time t is given by

$$v(t) = (R_a + R_b \cos 2\pi ft)i(t) \qquad (2.5)$$

Where R_a, R_b, *and* f are constants and $R_a > R_b > 0$. In the iv plane, the characteristic of this *linear time-varying resistor* is a straight line that passes at all times through the origin; its slope depends on the time.

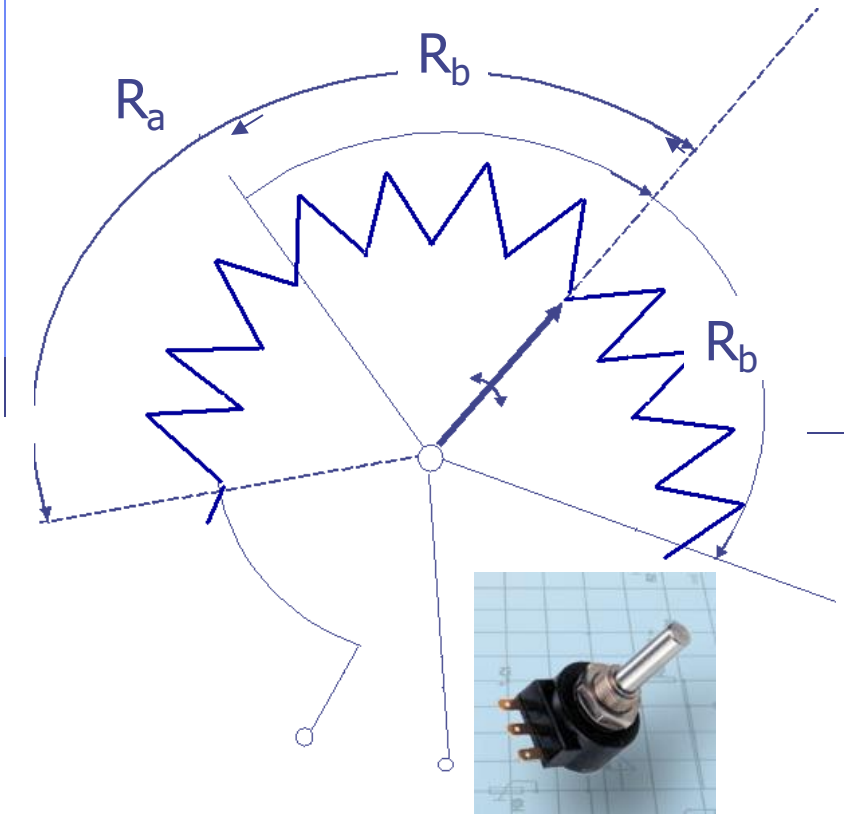

Fig. 2.4 Example of *linear time-varying resistor* ;a potentiometer with a sliding contact $R(t) = Ra + Rb\cos 2\pi ft$

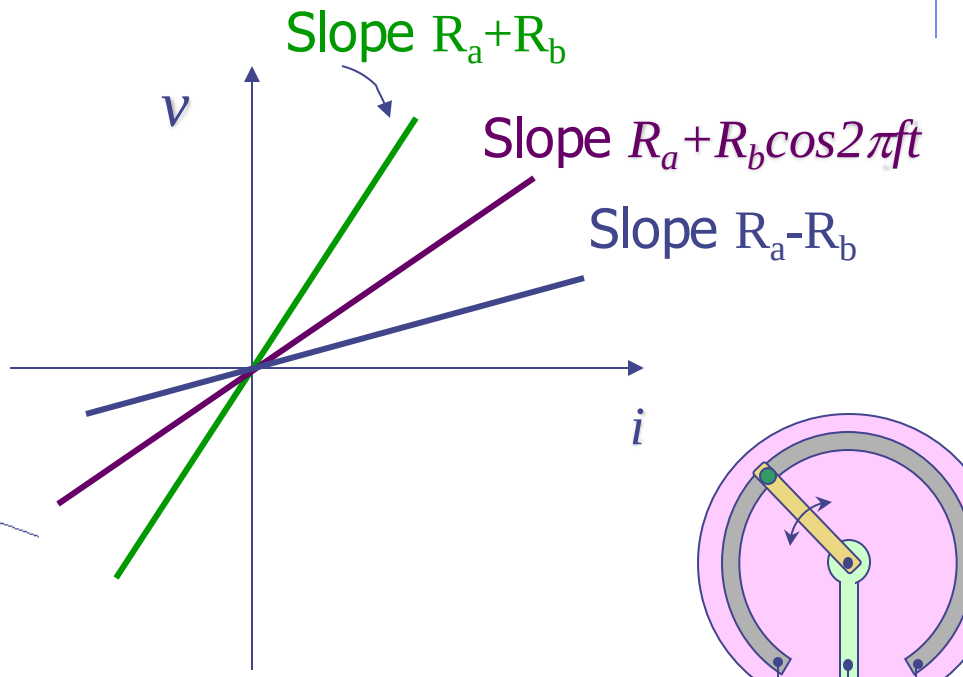

Fig.2.5 Characteristic at time t of the potentiometer of Fig. 2.5

Example 1

Linear time-varying resistors differ from time-invariant resistors in a fundamental way. Let $i(t)$ be a sinusoid with frequency f_1; that is

$$i(t) = A\cos 2\pi f_1 t, \tag{2.6}$$

where A and f_1 are constants. Then for a *linear time-varying resistor* with resistance R, the branch voltage due to this current is given by Ohm's law as follows:

$$v(t) = RA\cos 2\pi f_1 t \tag{2.7}$$

Thus, the input current and the output voltage are both sinusoids having the *same* frequency f_1. However, for the *linear time-varying resistors* the result is different. The branch voltage due to the sinusoidal current described by (2.6) for *linear time-varying resistor* specified by (2.5) is

$$v(t) = (R_a + R_b \cos 2\pi f t) A \cos 2\pi f_1 t =$$

$$= R_a \cos 2\pi f_1 t + \frac{R_b A}{2} \cos 2\pi (f + f_1) t + \frac{R_b A}{2} \cos 2\pi (f - f_1) t \quad (2.8)$$

This particular *linear time-varying resistor* can generate signals at two new frequencies which are, respectively, the sum and the difference of the frequencies of the input signal and the *time-varying resistor* .

Thus, *linear time-varying resistor* can be used to generate or convert sinusoidal signals. This property is referred to as *"modulation"*.

Example 2

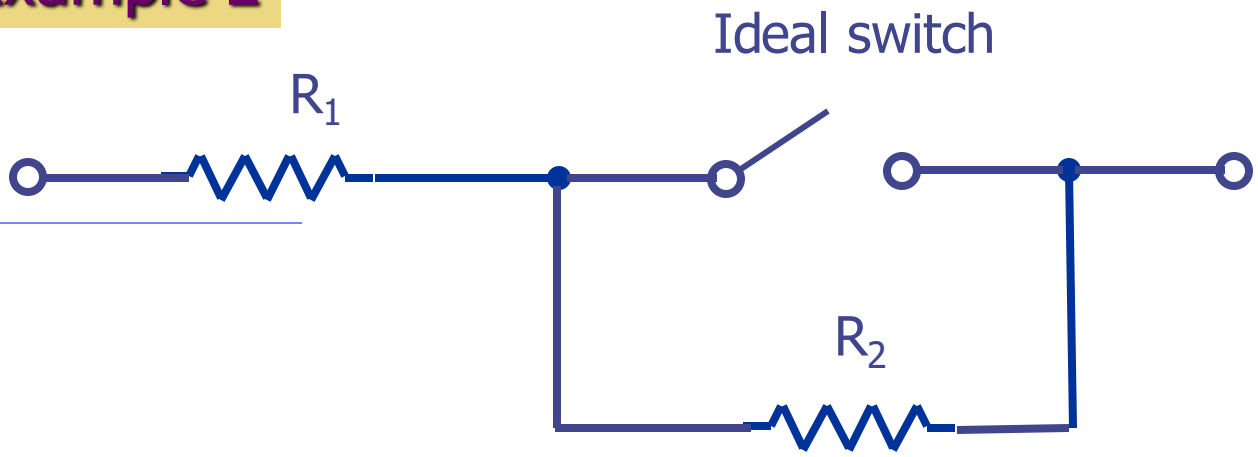

Fig 2.6 Model for a physical switch which has a resistance R_1+R_2 when opened and a resistance R_1 when closed; usually R_1 is very small, and R_2 is very large.

A switch can be considered a *linear time-varying resistor* that changes from one resistance level to another at its opening or closing. An ideal switch is an open circuit when it is opened and a shirt circuit when it is closed.

The Nonlinear Resistor

The typical example of a nonlinear resistor is a germanium diode. For *pn –junction diode* shown in Fig. 2.7 the branch current is a nonlinear function of the branch voltage, according to

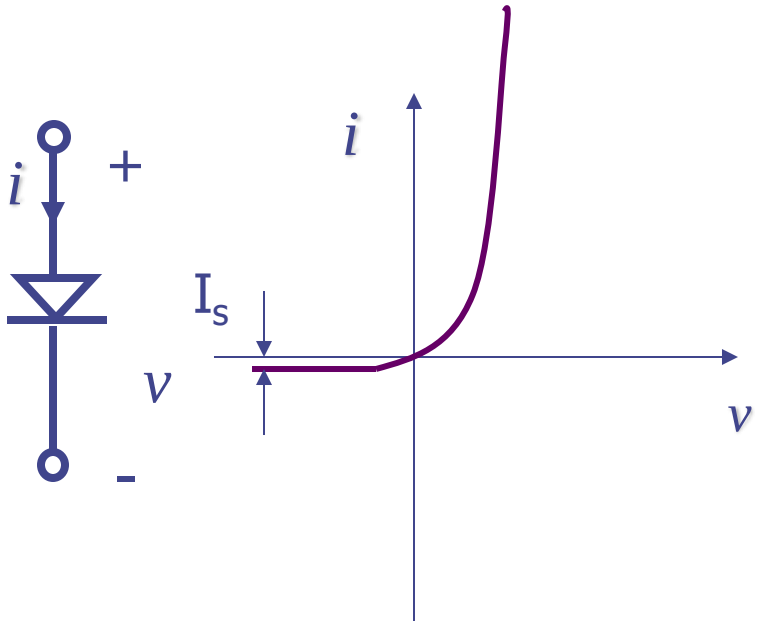

Fig. 2.7 Symbol for a *pn –junction diode* and its characteristic plotted in the vi plane.

$$i(t) = I_s\left(e^{qv(t)/kT} - 1\right) \qquad (2.9)$$

where I_s is a constant that represents the reverse saturation current, i.e., the current in the diode when the diode is reverse-biased (i.e., with v negative) with a large voltage.

The other parameters in (2.9) are q (the charge of electron), k (Boltsman's constant), and T (temperature in Kelvin degrees).

By virtue of its nonlinearity, a *nonlinear resistor* has a characteristic that is not at all times a straight line through the origin of the *vi* plane

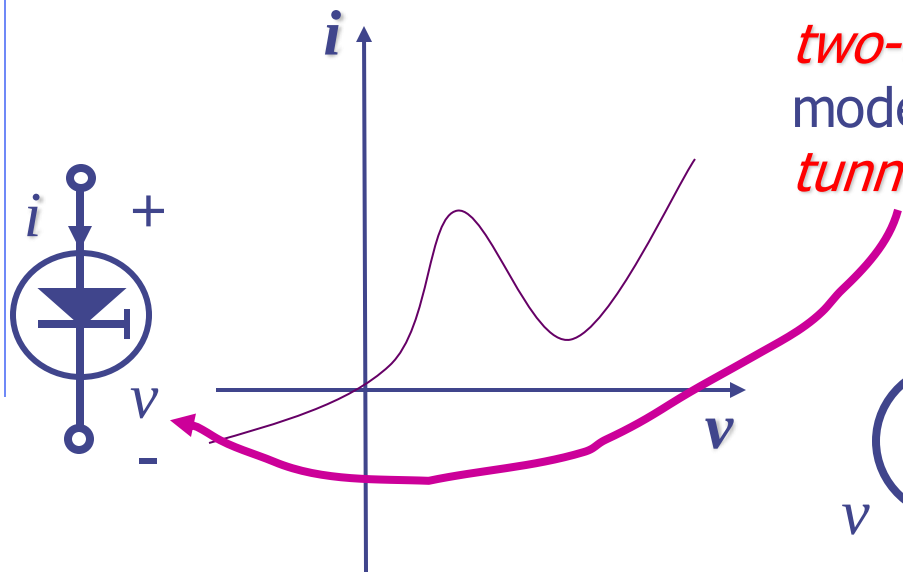

Fig.2.8 Symbol of a tunnel diode and its characteristic plotted in the *vi* plane

Other typical examples of *nonlinear two-terminal device* that may be modeled as non-linear resistor are the *tunnel diode* and the *gas tube .*

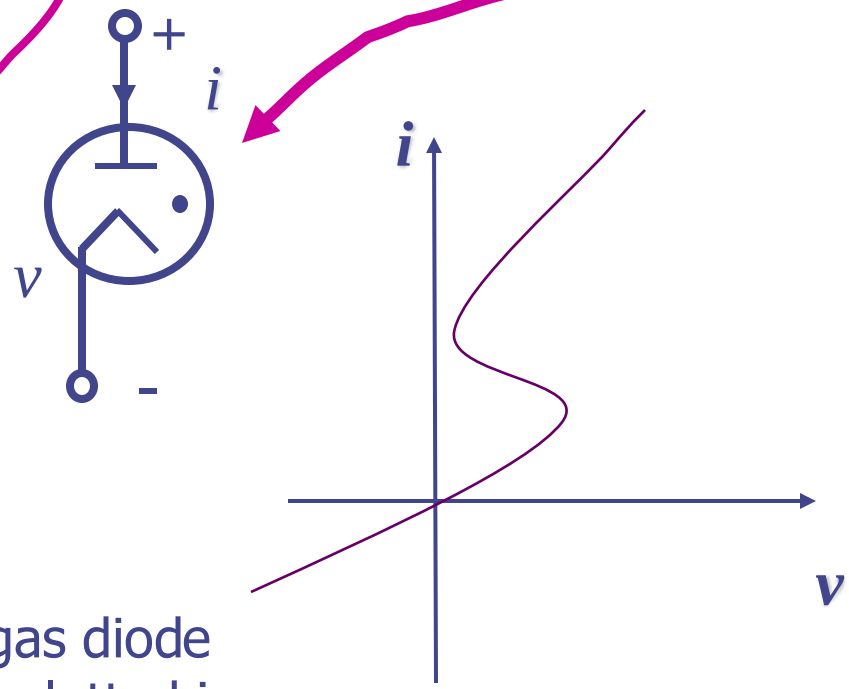

Fig.2.9 Symbol of a gas diode and its characteristic plotted in the *vi* plane

In the case of tunnel diode the current i is a single valued function of the voltage v; consequently we can write $i=f(v)$. Such a resistor is said to be *voltage-controlled.*

On the other hand in the characteristic of gas tube the voltage v is a single valued function of the current i and we can write $v=f(i)$. Such a resistor is said to be *current-controlled.*

These nonlinear devices have a unique property in that *slope of the characteristic is negative* in some range of voltage or current; they are often called *negative-resistance devices.*

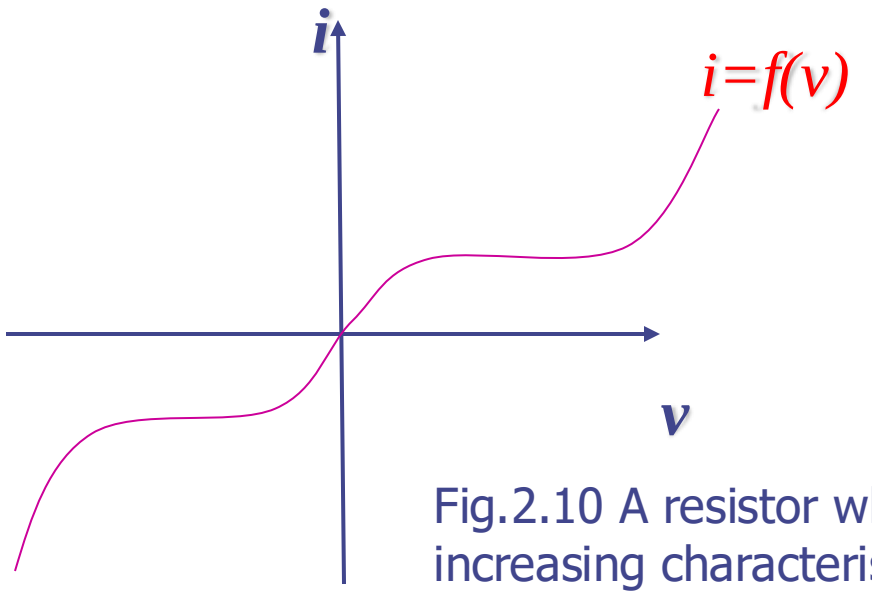

The diode, the tunnel diode and the gas tube are time invariant resistors because their characteristics do not vary with time

Fig.2.10 A resistor which has a monotonically increasing characteristic is both *voltage-controlled and current-controlled.*

Ideal diode

To analyze circuits with nonlinear resistors the method of piecewise linear approximation is often used. In this approximation non-linear characteristics are described by piecewise straight-line segments.

An often-used model in piecewise linear approximation is *the ideal diode.*

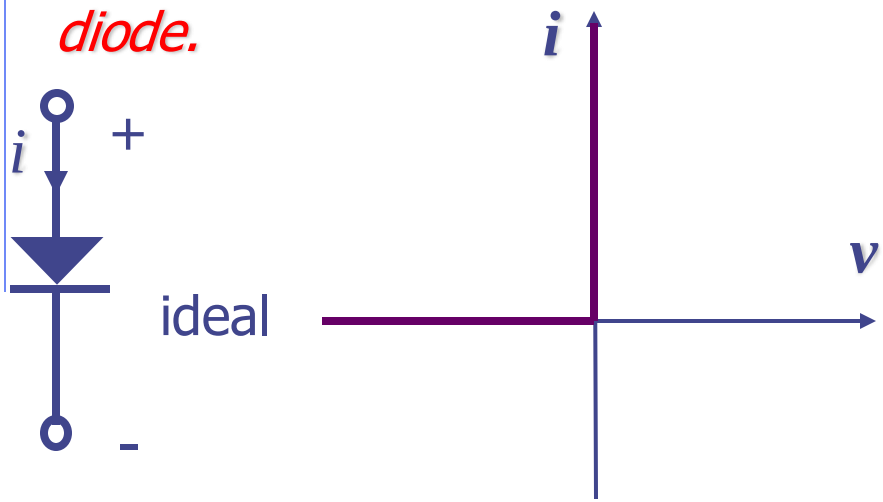

When $v<0$, $i=0$; that is for negative voltages the ideal diode behaves as an open circuit.

When $i>0$, $v=0$; that is for positive currents the ideal diode behaves as a short circuit.

Fig.2.11 Symbol for an ideal diode and its characteristic

Let us also introduce a *bilateral diode*, which characteristic is symmetric with respect to the origin; whenever the point (v,i) is on the characteristic, so is the point $(-v,-i)$. Clearly, all linear resistors are bilateral but most of nonlinear are not.

Example

Consider a physical resistor whose characteristic can be approximated by the nonlinear resistor defined by

$$v = f(t) = 50i + 0.5i^3$$

where v is in volts and i is in amperes

a. Let v_1, v_2 and v_3 be the voltages corresponding to $i_1 = 2$ amp, $i_2(t) = 2\sin 2\pi 60t$ and $i_3 = 10$ amp.

Calculate v_1, v_2 and v_3 . What frequencies are present in v_2?

Let v_{12} be the voltage corresponding to the current $i_1 + i_2$. Is $v_{12} = v_1 + v_2$?

Let v' be the voltage corresponding to the current ki_2. Is $v' = kv_2$?

b. Suppose we considering only currents of at most 10 mA. What will be the maximum percentage error in v if we were calculate v by approximating the nonlinear resistor by a 50 ohm linear resistor?

Solution

All voltages below are expressed in volts

a.

$$v_1 = 50 \times 2 + 0.5 \times 8 = 104$$

$$v_2 = 50 \times 2 \sin 2\pi 60t + 0.5 \times 8 \sin^3 2\pi 60t =$$

$$= 100 \sin 2\pi 60t + 4 \sin^3 2\pi 60t$$

Recalling that for all θ, $\sin 3\theta = 3\sin\theta - 4\sin^3\theta$, we obtain

$$v_2 = 100 \sin 2\pi 60t + 3 \sin 2\pi 60t - \sin 2\pi 180t$$

$$= 103 \sin 2\pi 60t - \sin 2\pi 180t$$

Frequencies present in v_2 are 50 Hz (the fundamental) and 150 Hz (the third harmonic of the frequency of i_2)

$$v_{12} = 50(i_1 + i_2) + 0.5(i_1 + i_2)^3$$

$$= 50(i_1 + i_2) + 0.5(i_1^3 + i_2^3) + 0.5(i_1 + i_2)3i_1 i_2$$

$$= v_1 + v_2 + 1.5 i_1 i_2 (i_1 + i_2)$$

Obviously, $v_{12} \neq v_1 + v_2$, and the difference is given by

$$v_{12} - (v_1 + v_2) = 1.5 i_1 i_2 (i_1 + i_2)$$

Hence $$v_{12}(t)-\left[v_1(t)+v_2(t)\right]=1.5\times 2\times 2\sin(2\pi 60t)(2+2\sin 2\pi 60t)$$
$$=12\sin 2\pi 60t+12\sin^2 2\pi 60t$$
$$=6+12\sin 2\pi 60t-6\cos 2\pi 120t$$

v_{12} thus contains the *third harmonic* as well as the *second harmonic*.

$$v_2'=50ki_2+0.5k^3i_2^3=k(50i_2+0.5i_2^3)+0.5k(k^2-1)i_2^3$$

Therefore

$$v_2'\neq kv_{21}$$

and

$$v_2'-kv_2=0.5k(k^2-1)i_2^3=4k(k^2-1)\sin^3 2\pi 60t$$

b. For *i=10 mA*, $v=50\times 0.01+0.5\times(0.01)^3+0.5(1+10^{-6})$

The percentage error due to linear approximation equals to 0.0001 percent at the maximum current of 10 mA. Therefore, for small currents the nonlinear resistor may be approximated by a linear 50-Ohm resistor

Independent Sources

In this section we'll introduce two new elements, the *independent* voltage source and the *independent* current source.

Voltage source

Independent voltage sources -> by KVL $v = v_s$

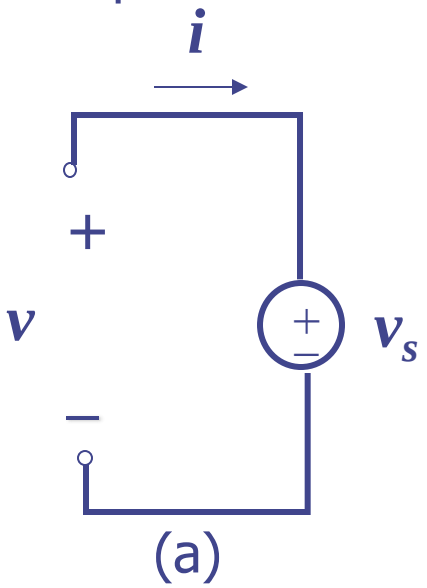

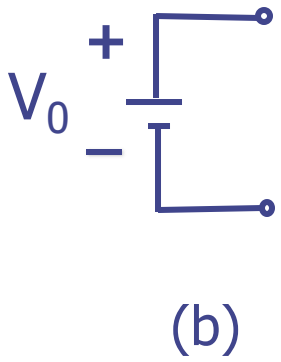

Fig.2.12 (a) Independent voltage source connected to any arbitrary circuit (b) Symbol for a constant voltage source of voltage V_0

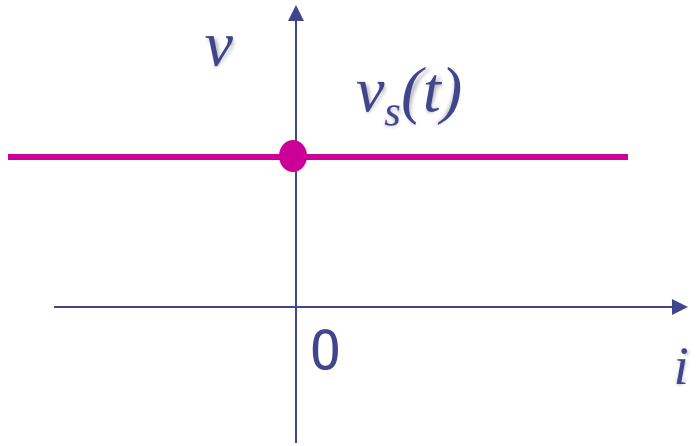

Fig. 2.13 Characteristic at time t of a voltage source. A voltage source may be considered as a current-controlled nonlinear resistor

Example

An automobile battery has a voltage and a current which depend on the load to which it is connected, according to the equation

$$v = V_0 - R_s i \qquad (2.10)$$

where v and $-i$ are the branch voltage and the branch current, respectively, as shown in Fig.2.14a

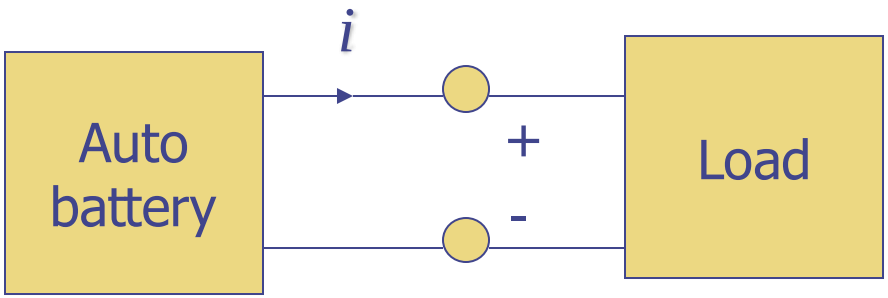

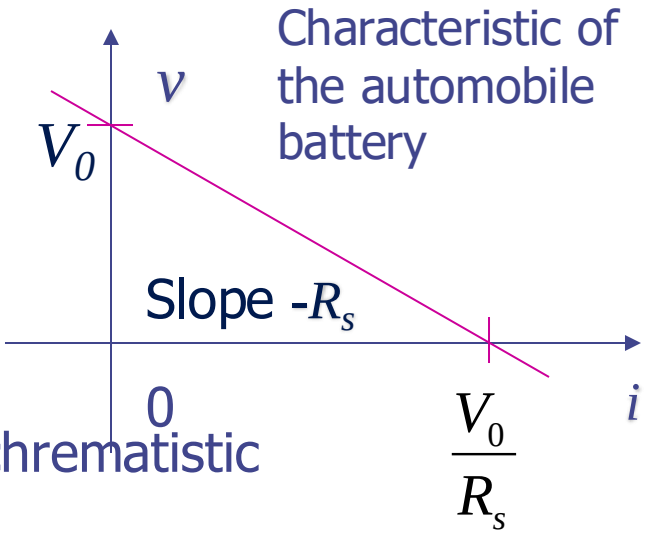

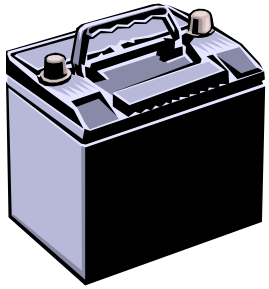

Fig.2.14 Automobile battery and its chrematistic

The intersection of the characteristic with the **v** axis is V_0. V_0 can be interpreted as the open-circuit voltage of the battery. The constant R_s can be considered as the internal resistance of the battery.

The automobile battery can be represented by an equivalent circuit that consists of the series connection of a constant voltage source V_0 and a linear time-invariant resistor with resistance R_s, as shown in Fig.2.15

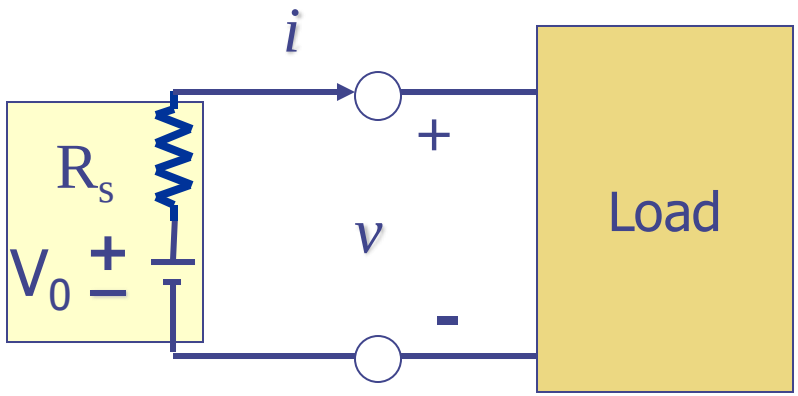

Fig.2.15 Equivalent circuit of the automobile battery

One can justify the equivalent circuit by writing the *KVL* equation for the loop in Fig. 2.15 and obtaining Eq.(2.10). If resistance R_s is very small, the slope in Fig. 2.14 is approximately zero, and the intersection of the characteristic with the i axis will occur far off this sheet of paper.

If $R_s=0$, the characteristic is a horizontal line in the iv plane, and the battery is a constant voltage source is defined above.

Current source

A two-terminal element is called an *independent current source* if it maintains a prescribed current $i_s(t)$ into the arbitrary circuit to which it is connected; that is whatever the voltage $v(t)$ across the terminals of the circuit may be, the current into the circuit is $i_s(t)$

A current source is a two-terminal circuit element that maintains a current through its terminals.
The value of the current is the defining characteristic of the current source.
Any voltage can be across the current source, in either polarity. It can also be zero. The current source does not "care about" voltage. It "cares" only about current.

Independent current sources -> by KCL $i = i_s$

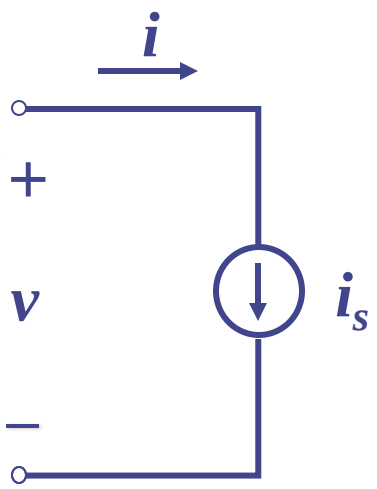

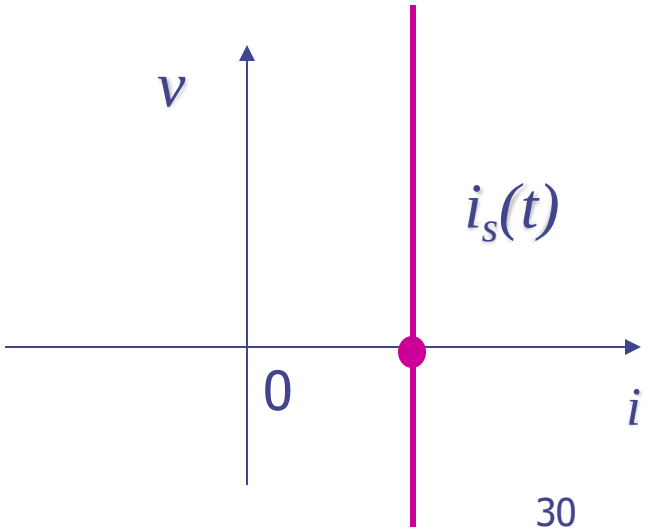

Thevenin and Norton Equivalent Circuits



M. Leon Thévenin (1857-1926), published his famous theorem in 1883.

Fig.2.17 (a) Thevenin equivalent circuit ; (b) Norton equivalent circuit

$$v = V_0 - R_s\, i \qquad\qquad i = I_0 - \frac{v}{R_s}$$

The equivalence of these two circuits is a special case of the *Thevenin and Norton Theorem*

Thevenin & Norton Equivalent Circuits

- *Thevenin's Theorem states that it is possible to simplify any linear circuit, no matter how complex, to an equivalent circuit with just a single voltage source and series resistance connected to a load.*

  A series combination of Thevenin equivalent voltage source V_0 and Thevenin equivalent resistance R_s

- Norton's Theorem states that it is possible to simplify any linear circuit, no matter how complex, to an equivalent circuit with just a single current source and parallel resistance connected to a load. Norton form:

  A parallel combination of Norton equivalent current source I_0 and Norton equivalent resistance R_s

Thévenin's Theorem: A **resistive circuit** can be represented by **one voltage source** and **one resistor**:

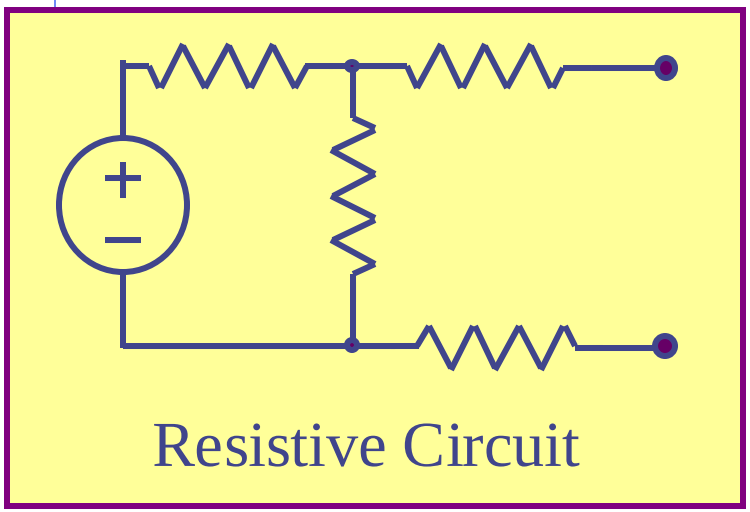

Resistive Circuit

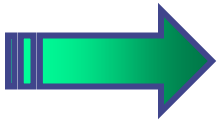

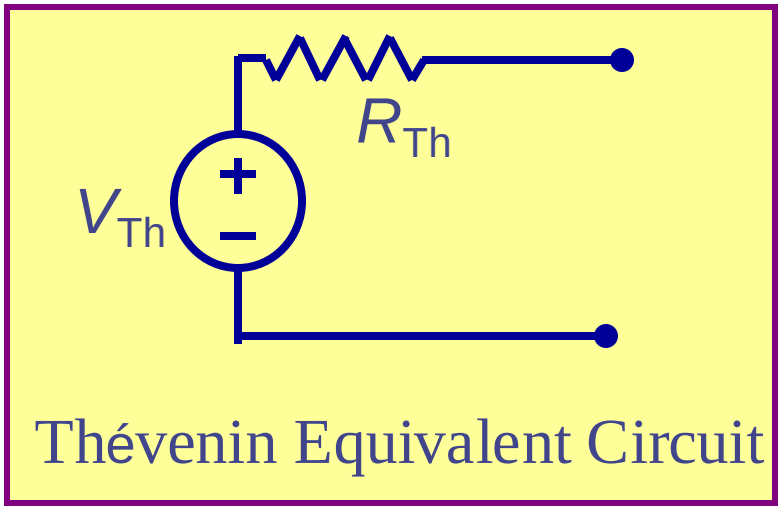

Thévenin Equivalent Circuit

Lecture 3

Some typical Waveforms

The Sinusoid

The unit step function

The Pulse

The unit impulse

Capacitors (Linear and Nonlinear).

Inductors (Linear and Nonlinear). Hysteresis.

Summary of Four way Classification of Two-terminal Elements

Waveforms and their Notation

Let us now define some of the more useful waveforms that we shall use repeatedly later

The constant

This is the simplest waveform; it is described by

$$f(t) = K \qquad for\ all\ \ t$$

where K is a constant

The sinusoid

To represent a sinusoidal waveform or sinusoid for short, we use the traditional notation

$$f(t) = A\cos(\omega t + \phi)$$

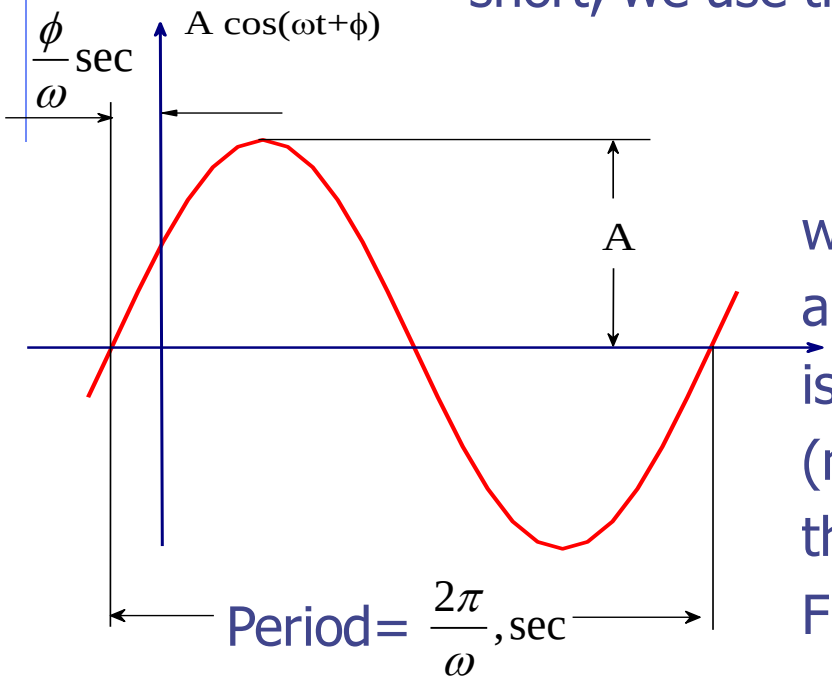

where the constant A is called amplitude of sinusoid, the constant ω is called the (angular) frequency (measured in radians per second), and the constant ϕ is called phase (See Fig.3.1)

Fig.3.1 A sinusoidal waveform of amplitude A and phase ϕ

The unit step

The ***unit step function*** as shown in Fig.3.2 is denoted by $u(\cdot)$ and is defined by

$$u(t) = \begin{cases} 0 & for \quad t < 0 \\ 1 & for \quad t > 0 \end{cases} \qquad (3.1)$$

And its value at $t=0$ may be taken to be 0, $\frac{1}{2}$, *or* 1. Throughout this curse we shall use the letter u exclusively for the unit function.

Suppose we delayed a unit step by t_0 sec. The resulting waveform has $u(t-t_0)$as an ordinate at time t. Indeed, for $t<t_0$, the argument is negative, and hence the ordinate is zero; for $t>t_0$, the argument is positive and the ordinate is equal to 1 (See Fig.3.3).

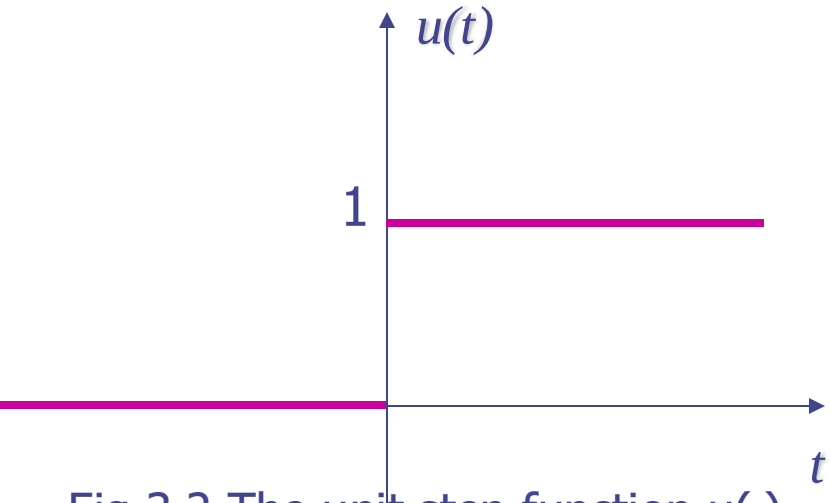

Fig.3.2 The unit step function u(.)

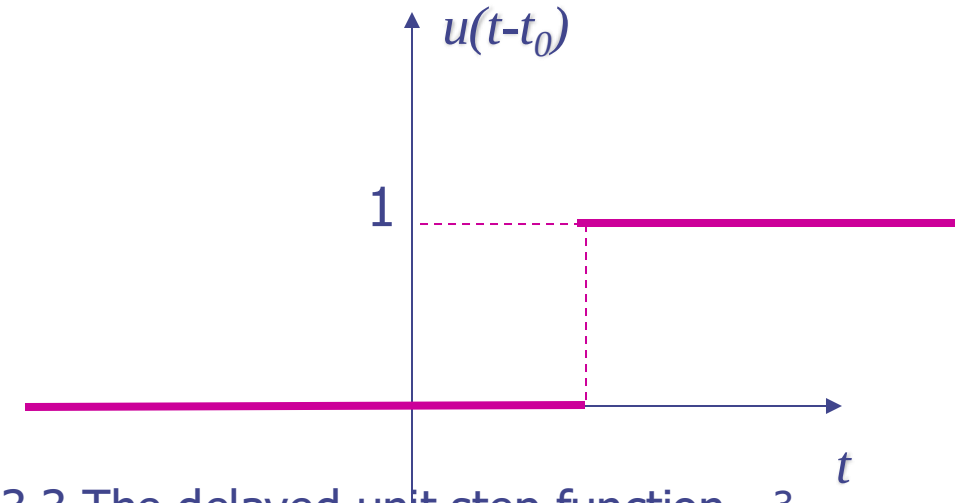

Fig.3.3 The delayed unit step function

The pulse

We shall frequently have to use a rectangular pulse and for his purpose we define *pulse function* $p_\Delta(\cdot)$

$$p_\Delta(t) = \begin{cases} 0 & t < 0 \\ \dfrac{1}{\Delta} & 0 < t < \Delta \\ 0 & \Delta < t \end{cases} \qquad (3.2)$$

In other words, p_Δ is a pulse of height $1/\Delta$, of width Δ, and starting at $t=0$. Note that whatever the value of the positive parameter Δ, the area under $p_\Delta(\cdot)$ is 1 (see Fig.3.4). Note that

$$p_\Delta(t) = \frac{u(t) - u(t-\Delta)}{\Delta} \qquad \text{for all } t \qquad (3.3)$$

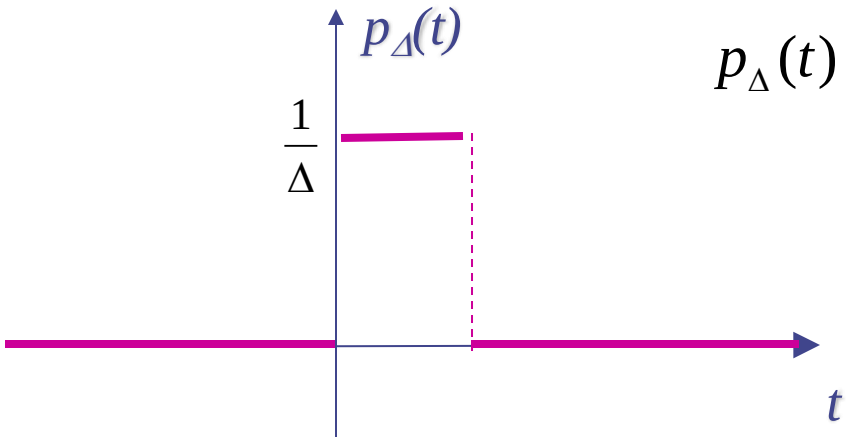

Fig.3.4 A pulse function $p_\Delta(\cdot)$

The unit impulse

The *unit impulse $\delta(\cdot)$ (also called the Dirac delta function)* is not a function in the strict mathematical sense of the term. For our purposes we state that

$$\delta(t) = \begin{cases} 0 & for \quad t \neq 0 \\ singular & at \quad t = 0 \end{cases} \tag{3.4}$$

and the singularity at the origin is such that for any $\xi > 0$ (See Fig.3.5)

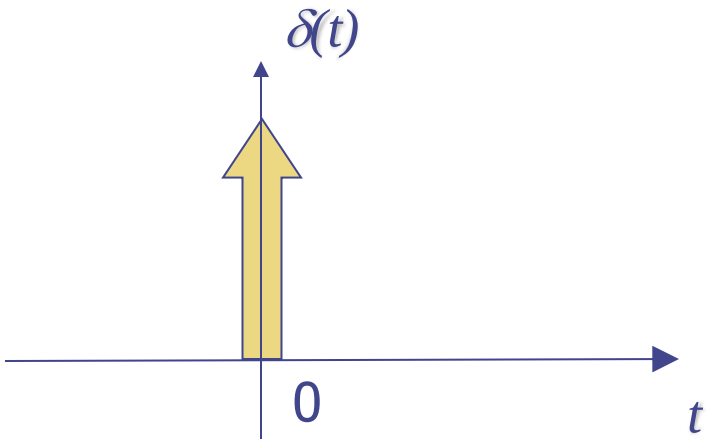

Fig.3.5 A unit impulse function $\delta(\cdot)$

$$\int_{-\xi}^{\xi} \delta(t)dt = 1 \tag{3.5}$$

The impulse function can be considered as the limit, as $\Delta \to \infty$, of the pulse p_Δ. Physically δ can be considered as charge density of a unit point charge located at $t=0$ on the t axis

From the definition of δ and u we get formally

$$u(t) = \int_{-\infty}^{t} \delta(t')dt' \tag{3.6}$$

and

$$\frac{du(t)}{dt} = \delta(t) \tag{3.7}$$

Another frequently useful property is the *sifting property* of the unit impulse

$$\int_{-\xi}^{\xi} f(t)\delta(t)dt = f(0) \tag{3.8}$$

for any positive ξ

This is easily made reasonable by approximation δ by p_Δ as follows:

$$\int_{-\xi}^{\xi} f(t)\delta(t) = \lim_{\rightarrow} \int_{-\xi}^{+\xi} f(t)\, p_\Delta(t) = \lim_{\rightarrow} \int_{0}^{\Delta} f(t)\frac{1}{\Delta}dt = f(0)$$

Remarks

1. Related to the unit step function is the *unit ramp* $r(\cdot)$ (See Fig.3.6), defined by

$$r(t) = tu(t) \quad for \quad all \quad t \tag{3.9}$$

From (2.3) and (2.11) we can show that

$$r(t) = \int_{-\infty}^{t} u(t')dt' \tag{3.10}$$

and

$$\frac{dr(t)}{dt} = u(t) \tag{3.11}$$

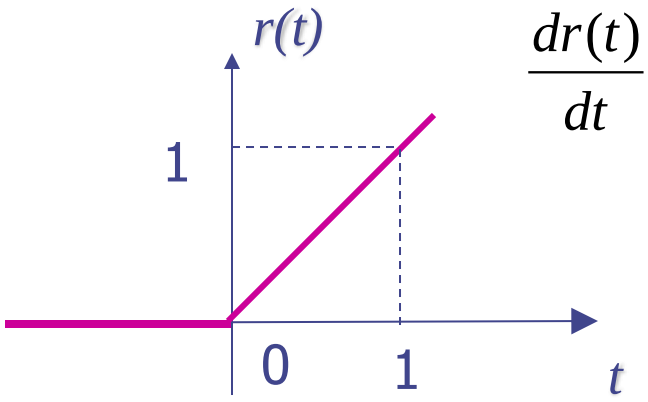

Fig.3.6 A unit ramp function

2. Closely related to the unit impulse function is the *unit doublet* $\delta'(\cdot)$, which is defined by

$$\delta'(t) = \begin{cases} 0 & for \quad t \neq 0 \\ singular & at \quad t = 0 \end{cases} \tag{3.12}$$

And the singularity at t=0 is such that

$$\delta(t) = \int_{-\infty}^{t} \delta'(t')dt' \tag{3.13}$$

and

$$\frac{d\delta(t)}{dt} = \delta'(t) \tag{3.14}$$

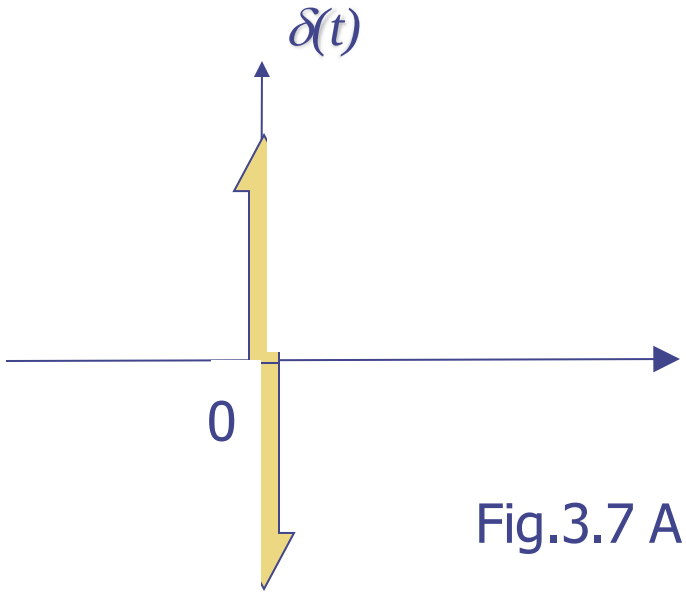

Fig.3.7 A doublet $\delta'(\cdot)$,

Capacitors

What is a Capacitor?

Two conductors separated by an insulator:

A simple capacitor:

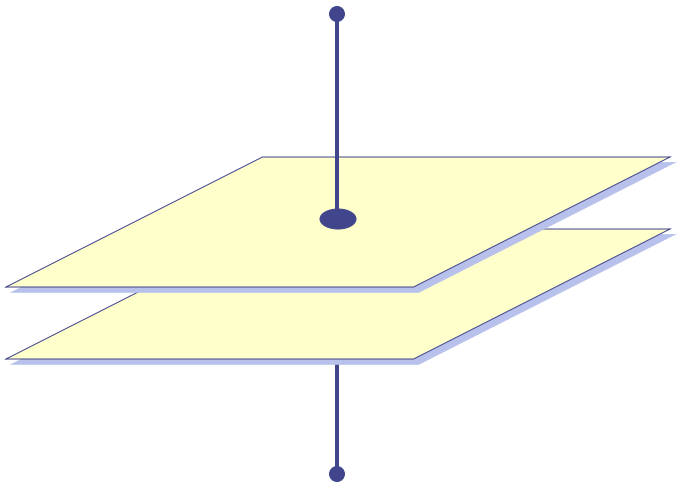

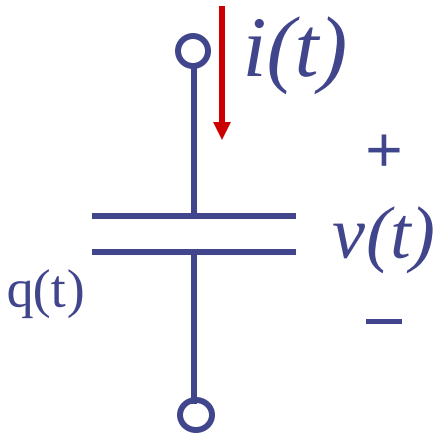

Fig.3.8 Symbol for a capacitor

We shall always call $q(t)$ the charge at time t on the plate to which the reference arrow of the current $i(t)$ points

$$C = \frac{\varepsilon A}{d}$$

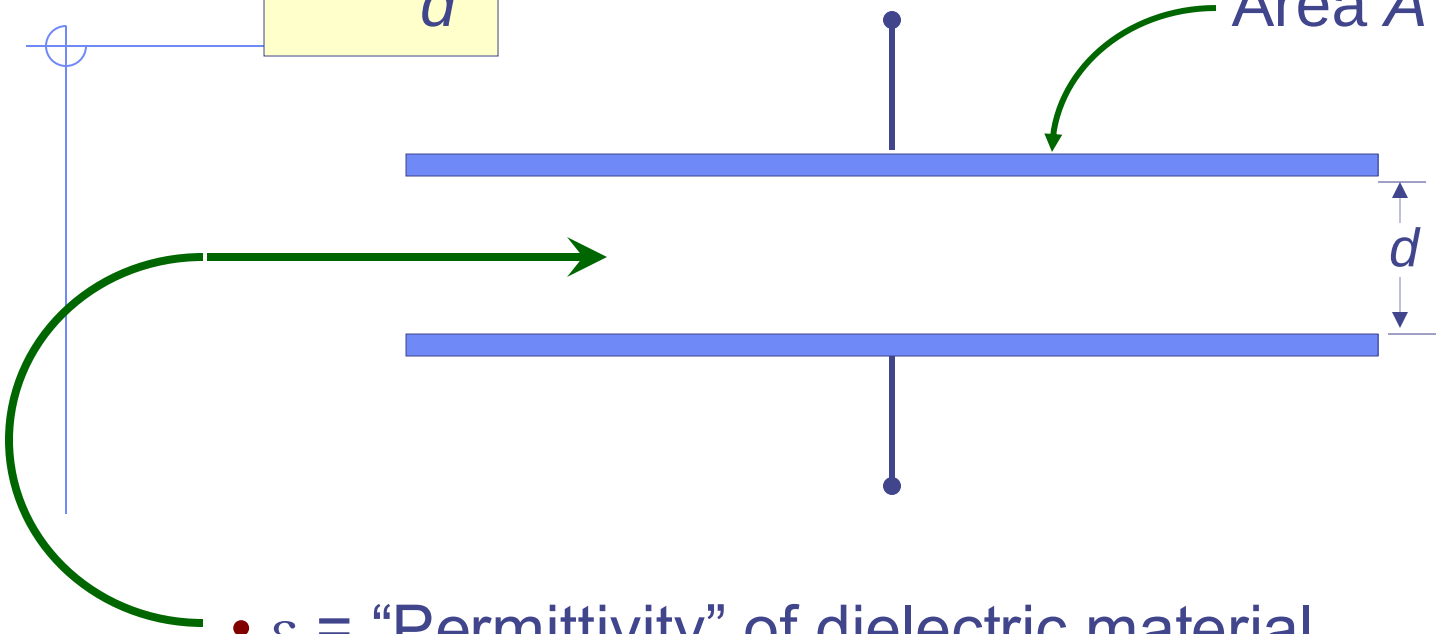

- ε = “Permittivity” of dielectric material
- d = Separation distance
- A = Area of electrodes $\perp$ d

Note: ε_0 for air = 8.85×10^{-12} farads/meter

Most plastics: ε = 2 to 4 ε_0

When $i(t)$ is positive, positive charges are brought (at time t) to the top plate whose charge is labeled $q(t)$; hence the rate of change of q is also positive. Thus we have

$$i(t) = \frac{dq}{dt} \tag{3.15}$$

In this formula currents are given in amperes and charges in coulombs

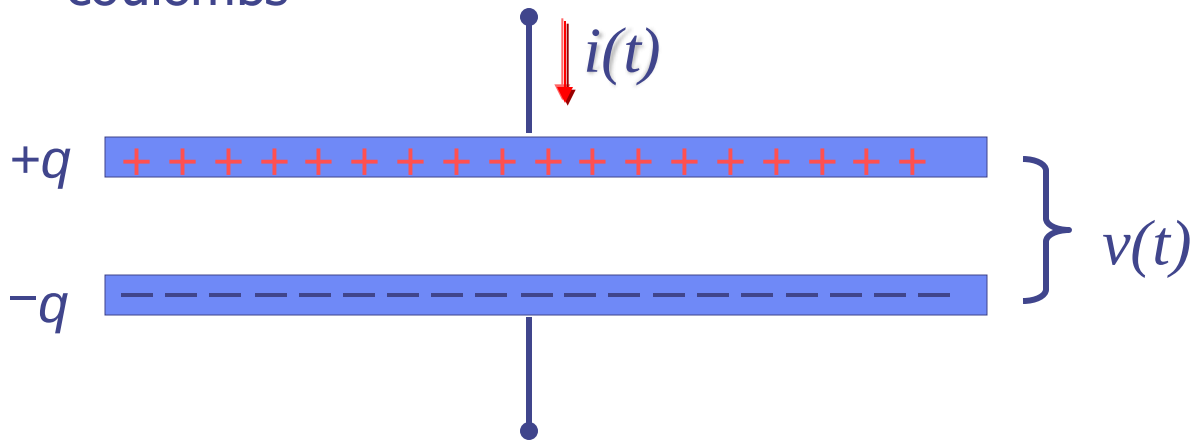

A capacitor whose characteristic is at all times a straight line through the origin of the vq plane is called a linear is called *linear capacitor.*

Conversely, if at any time the characteristic is not a straight line through the origin of the vq plane, the capacitor is called *nonlinear*.

A capacitor whose characteristic does not change with time is called a *time-invariant capacitor*.

If the characteristic changes with time, the capacitor is called *time-varying capacitor.*

As in the case of resistors we have a four way classification of Capacitors

a) linear
b) non-linear
c) time-invariant
d) time-varying

The Linear Time-Invariant Capacitor

From definition of linearity and time invariance, the characteristic of a linear time invariant capacitor can be written as

$$q(t) = Cv(t) \tag{3.16}$$

where C is constant (independent of t and v) which measures the slope of the characteristic and which is called *capacitance*.

The units are

C=*Farads*

q = *Columbs*

v = *Volts*

The equation relating the terminal voltage and the current is

$$i(t) = \frac{dq}{dt} = C\frac{dv}{dt} = \frac{1}{S}\frac{dv}{dt} \tag{3.17}$$

Where $S=C^{-1}$, and is called the elastance. Integrating (3.17) between 0 and t we get

$$v(t) = v(0) + \frac{1}{C}\int_0^t i(t')dt' \qquad (3.18)$$

Thus a linear time invariant capacitor is completely specified as a circuit element only if the capacitance C (the slope or its characteristic) and the initial voltage $v(0)$ are given

Equation (3.17) defines a function expressing $i(t)$ in terms of dv/dt; that is $i(t)=f(dv/dt)$. It is fundamental to observe that this function $f(\cdot)$ is linear.

On the other hand, Eq.(3.18) defines a function expressing $v(t)$ in terms of $v(0)$ and the current waveform $i(\cdot)$ over the interval $[0,t]$. Only if $v(0)=0$, the function defined by (3.18) is a linear function that gives the value of $v(t)$, the voltage at time t, in terms of the current waveform over the interval $[0,t]$.

The integral in (3.18) represents the net area under the current curve between time 0 and t; we say "net are" to remind that sections on the curve $i(\cdot)$ above the time axes contribute positive areas, and those below contribute negative areas.

The value of v at time t, $v(t)$ depends on its initial value $v(0)$ and all the values of the current between time 0 and time t; this fact is often alluded to by saying that *"capacitors have memory".*

Exercise 1

Let a current source $i_s(t)$ be connected to a linear time-invariant capacitor with capacitance C and $v(0)=0$.

Determine the voltage form $v(\cdot)$ across the capacitor for

a. $i_s(t)=u(t)$
b. $i_s(t)=\delta(t)$
c. $i_s(t)=A\cos(\omega t+\phi)$

Exercise 2

Let a voltage source $v_s(t)$ be connected to a linear time-invariant capacitor with capacitance C and $v(0)=0$.

Determine the current form $i(\cdot)$ across the capacitor for

a. $v_s(t)=u(t)$
b. $v_s(t)=\delta(t)$
c. $v_s(t)=A\cos(\omega t+\phi)$

Example

A current source is connected to the terminals of a linear time-invariant capacitor with a capacitance of 2 Farads and an initial voltage ***v(0)=-1/2 volt*** (see Fig.3.10 a)

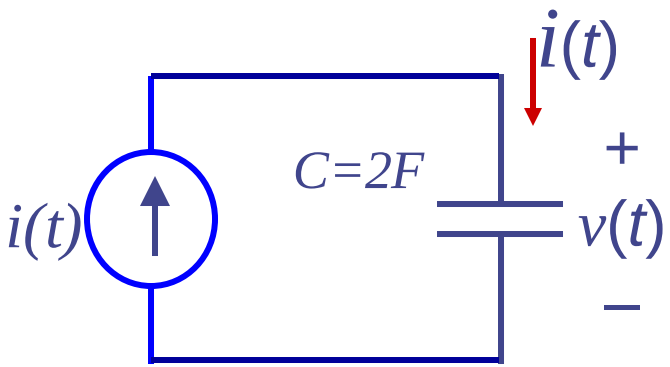

(a)

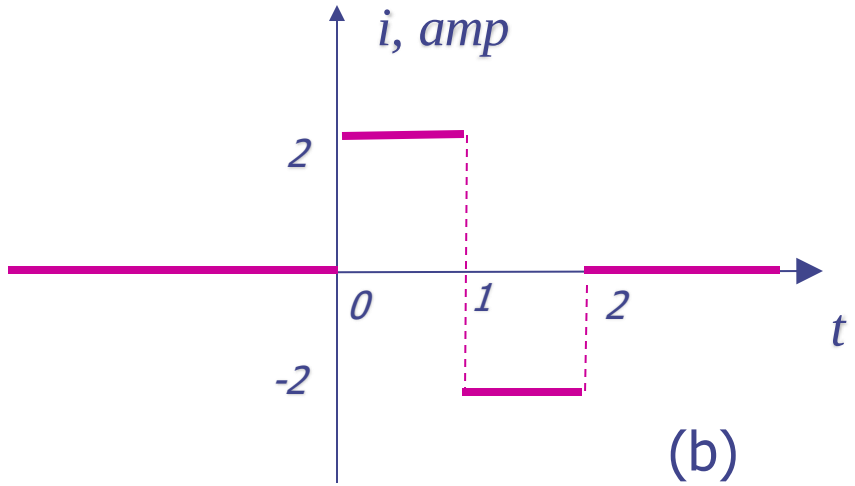

(b)

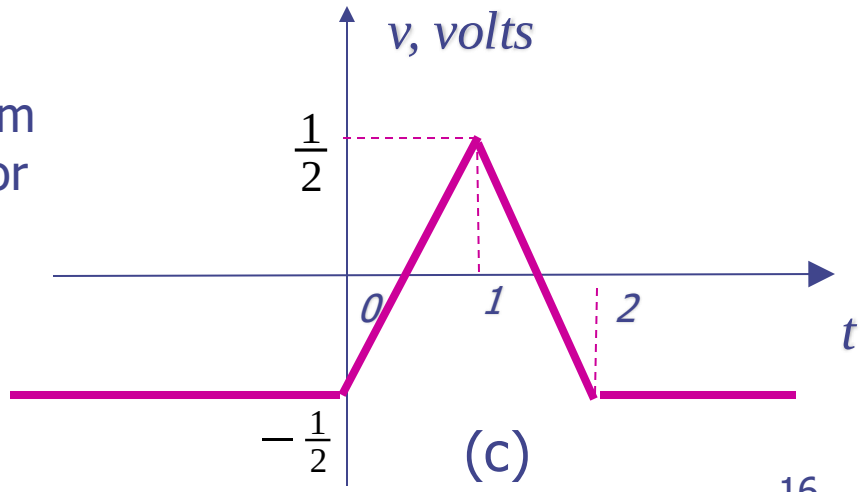

(c)

Fig.3.10 Voltage and current waveform across a linear time-invariant capacitor

Let the current source be given by the simple waveform $i(\cdot)$ shown in Fig.3.10 b. The branch voltage across the capacitance can be computed immediately from Eq.3.18. as

$$v(t) = -\tfrac{1}{2} + \tfrac{1}{2}\int_0^t i(t')dt'$$

and the voltage waveform $v(\cdot)$ is plotted in Fig.3.10c. The voltage is - ½ volt for t negative. At $t=0$ it starts to increase and reaches ½ volt at $t=1$ sec as a result of the contribution of the positive portion of the current waveform. The voltage then decreases linearly to -½ volt because of the constant negative current for $1<t<2$, and stays constant for $t \geq 2$ sec.

This simple example clearly points out that $v(t)$ for $t \geq 0$ depends on the initial value $v(0)$ and on all the values of the waveform $i(\cdot)$ between time 0 and time t. Furthermore it is easy to see that $v(t)$ is not a linear function of $i(\cdot)$ when $v(0)$ is not zero. On the other hand if the initial value $v(0)$ is zero, the branch voltage at time t, $v(t)$ is a linear function of the current waveform $i(\cdot)$

Remarks

1. Equation 3.18 states that time t the branch voltage $v(t)$, where $t \geq 0$, across a linear time-invariant capacitor is a sum of two terms.

The first term is the voltage $v(0)$ at $t=0$, that is the initial voltage cross the capacitor. The second term is the voltage at time t across a capacitor C farads if at $t=0$ this capacitor is initially uncharged.

Thus, any linear time-invariant capacitor with an initial voltage $v(0)$ can be considered as the series connection of a dc voltage source $E=v(0)$ and the same capacitor with zero initial voltage, as shown in Fig. 3.11

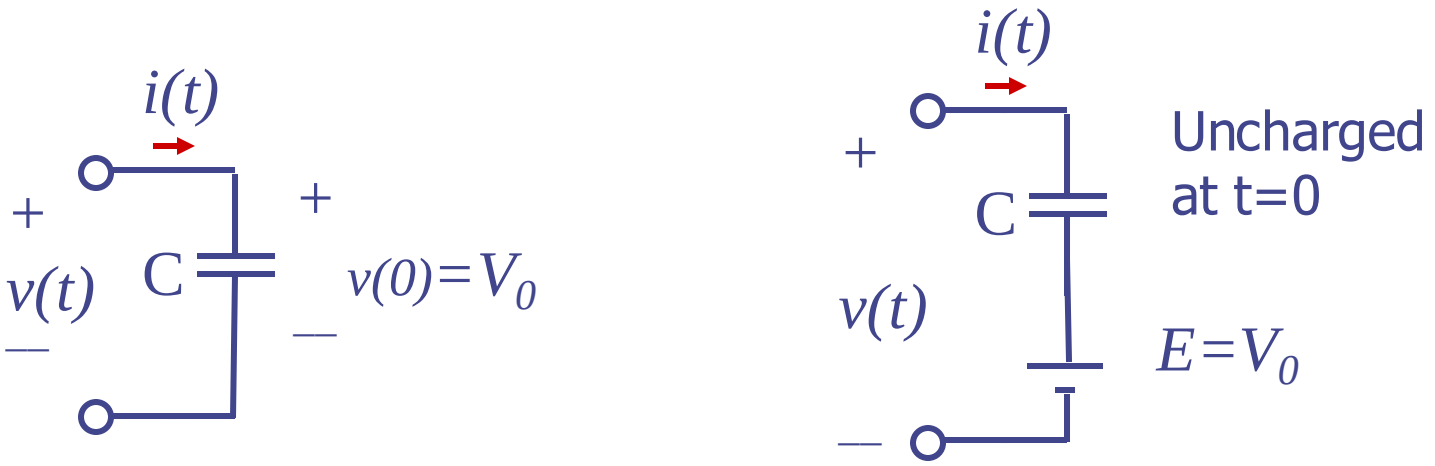

Fig. 3.11 The initial charged capacitor with $v(0)=V_0$ in (a) is equivalent to the series connection of the same capacitor, which is initial uncharged and a constant voltage source $E=V_0$ in (b)

2. Consider a linear time-invariant capacitor with zero initial voltage; that is, $v(0)=0$. It is connected in series with an arbitrary independent voltage source $v_s(t)$ as shown in Fig. 3.12a. The series connection is equivalent to the circuit (as shown in Fig. 3.12b) in whish the same capacitor is connected in parallel with a current source $i_s(t)$, and

$$i_s(t) = C\frac{dv_s}{dt} \tag{3.19}$$

The voltage source $v_s(t)$ in Fig. 3.12a is given in terms of the current source $i_s(t)$, in Fig. 3.12b.

$$v_s = \frac{1}{C}\int_0^t i_s(t')dt' \tag{3.20}$$

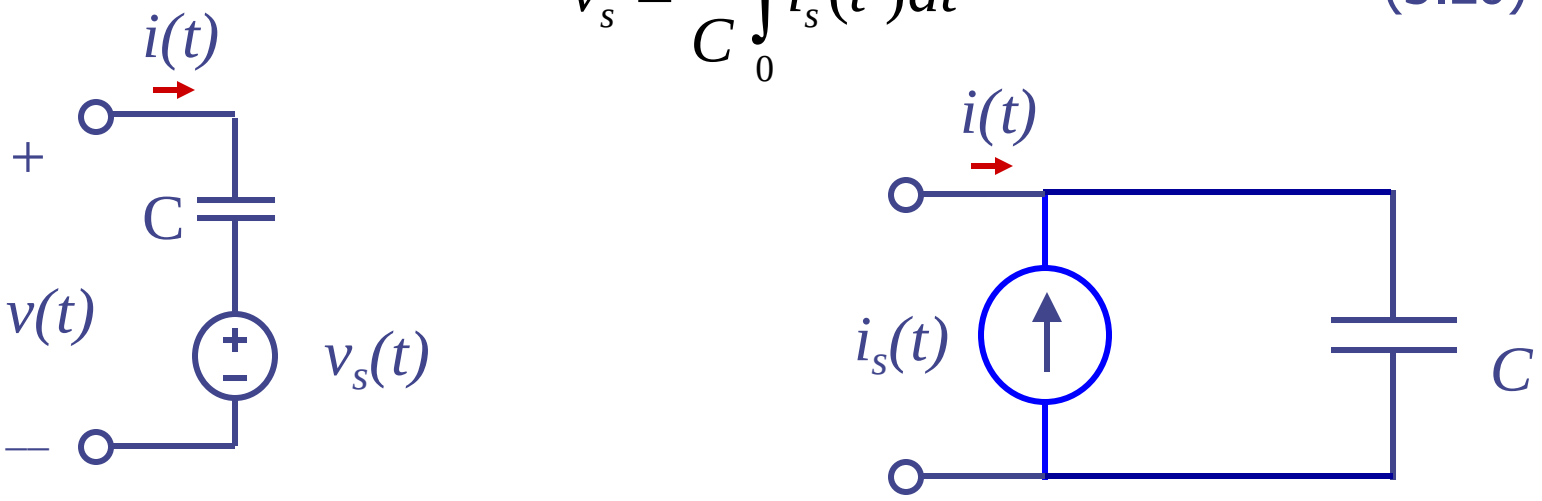

Fig. 3.12 Thevenin and Norton equivalent circuits fro a capacitor with an independent source

The results in Fig.3.12a and b are referred to as *Thevenin and the Norton equivalent circuits* respectively. The proof is similar to that of the resistor case. In particular, if the voltage source v_s in Fig. 3.12 a is a unit step function, by Eq.(3.19) the current source i_s in Fig. 3.12b is an impulse function $C\delta(t)$.

3. Consider Eq.(3.19) again at instant t and at instant t+dt; by subtraction we get

$$v(t+dt)-v(t)=\frac{1}{C}\int_{t}^{t+dt} i(t')dt' \qquad (3.21)$$

Let us assume that $i(t)$ is bounded for all t; that is a finite constant M such that $|i(t)|\le M$ for all t under consideration. The area under the waveform $i(\cdot)$ over the interval $[t,t+dt]$ will go to zero as $dt\to 0$. Also from (3.21), as $dt \to 0$, $v(t+dt) \to v(t)$, or stated in another way, the voltage waveform $v(\cdot)$ is continuous.

We can thus state an important property of the linear time-invariant capacitor:

If the current $i(\cdot)$ in a linear time-invariant capacitor remains bounded for all time in the closed interval $[0,T]$, the voltage v across the capacitor is a continuous function in the open interval $(0,T)$; that is the branch voltage for such a capacitor cannot jump instantaneously from one value to a different value as long as the current remains bounded.

The Linear Time-varying Capacitor

If the capacitor is linear but time varying its characteristic is at all times a straight line through the origin, but its slope depends on time. Therefore, the charge at time t can be expressed in term of the voltage at time t by an equation of the form

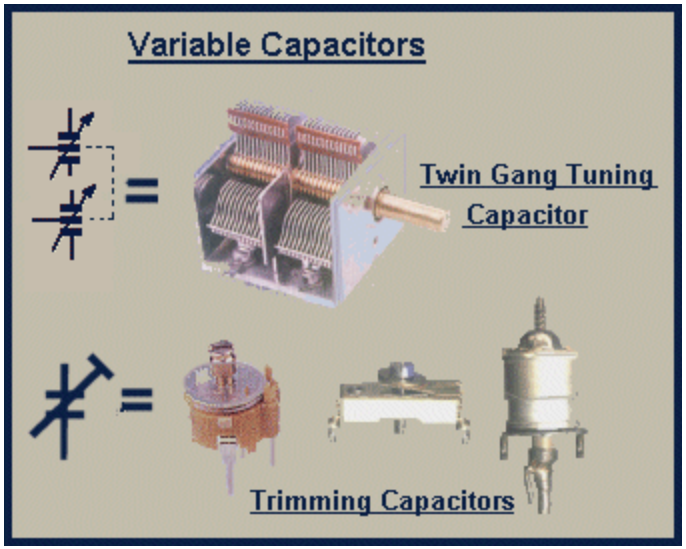

$$q(t) = C(t)v(t) \qquad (3.22)$$

where $C(\cdot)$ is prescribed function of time that specifies for each t the slope of the capacitor characteristic.

This function $C(\cdot)$ is part of the specification of the linear time-varying capacitor. Equation (3.15) then becomes

$$i(t) = \frac{dq}{dt} = C(t)\frac{dv}{dt} + \frac{dC}{dt}v(t) \qquad (3.23)$$

The capacitance of periodically varying capacitor may be expressed in a Fourier series as

$$C(t) = C_0 + \sum_{k=1}^{\infty} C_k \cos(2\pi f k t + \phi_k) \qquad (3.24)$$

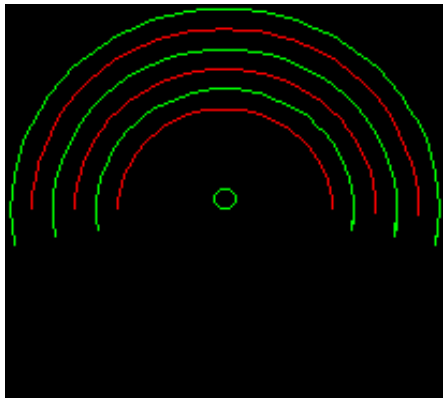

where f represents the frequency of rotation of the moving plate.

Exercise

Consider the circuit shown in Fig. 3.13. Let the voltage be a sinusoid, $v(t) = A\cos\omega_1 t$ where the constant $\omega_1 = 2\pi f_1$ is the angular frequency.

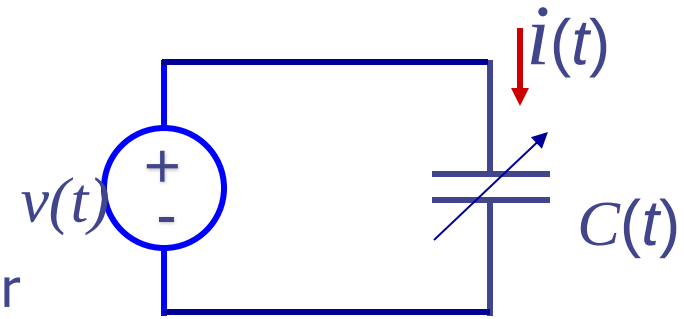

Fig.3.13 A linear time-varying capacitor is driven by a sinusoidal voltage source

Let the linear time varying capacitor be specified by

$$C(t) = C_0 + C_1 \cos 3\omega_1 t$$

where C_0 and C_1 are constants. Determine the current $i(t)$ for all t.

The Nonlinear Capacitor

Let us consider the nonlinear capacitor specified by its characteristic $q=f(v)$ (See Fig.3.14)

The first term v_1 is a constant voltage applied to the capacitor by a biasing battery (dc bias), and the second term v_2 is a small varying voltage. For example, v_2 might be voltage in an input stage of a receiver.

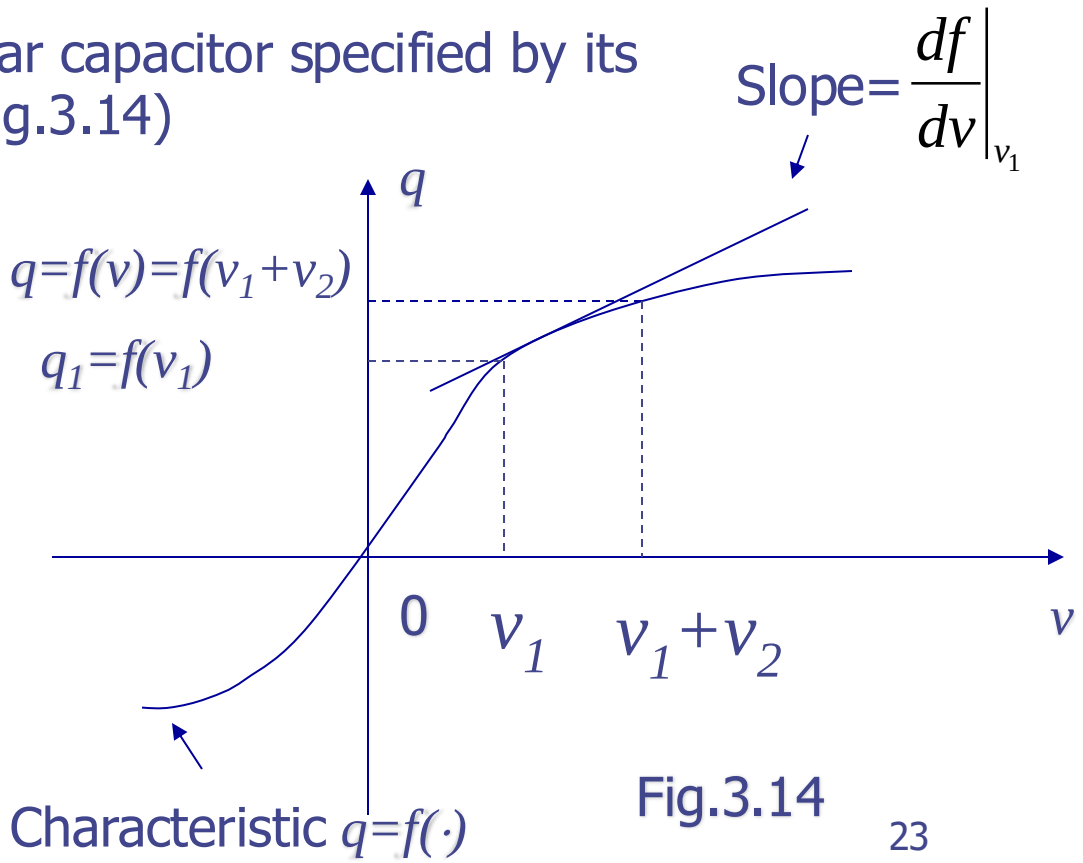

Fig.3.14

Using a Taylor series expansion, we have

$$q = f(v) = f(v_1 + v_2) \approx f(v_1 + \left.\frac{df}{dv}\right|_{v_1} v_2 \qquad (3.25)$$

In Eq.(3.25) we neglecting second order terms; this introduces negligible errors provided v_2 is sufficient small. More precisely, v_2 must be sufficient small so that the part of characteristic corresponding to the abscissa v_1+v_2 is well approximated by a straight line segment passing through the point $(v_1,f(v_1))$ and having slope $\left.\frac{df}{dv}\right|_{v_1}$.

The current $i(t)$ form Eq. (3.15) is

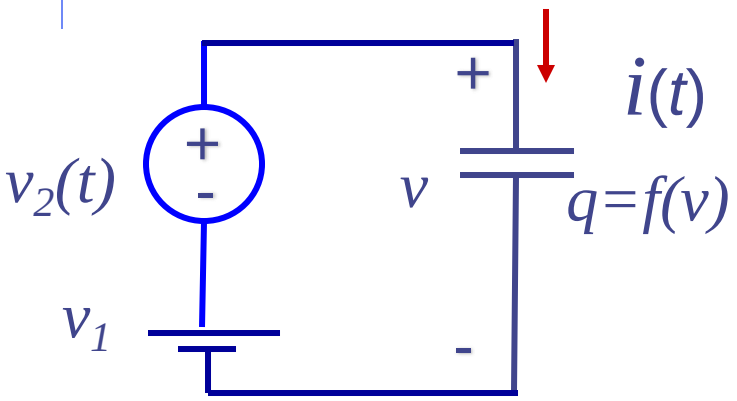

Fig. 3.15 A nonlinear capacitor is driven by a voltage v which is the sum of a dc voltage v_1 and a small varying voltage v_2.

$$i(t) = \frac{dq}{dt} = \left.\frac{df}{dv}\right|_{v_1} \frac{dv_2}{dt} \qquad (3.26)$$

Note that v_1 is a constant. Thus, as far as the small-signal v_2 is concerned , the capacitance $C(v_1) = \left.\frac{df}{dv}\right|_{v_1}$ is a linear time-invariant capacitance and is equal to the slope of the capacitor characteristic in the vq plane at the operating point

If the nonlinear capacitance is used in a parametric amplifier, the voltage v_1 is not a constant ; however v_2, which represents the time varying signal is still assumed to be small so that the approximations used in writing (3.25) are still valid.

The voltage across the capacitor is $v_1(t)+v_2(t)$. Consequently, the charge is

$$q(t) = f(v_1(t)+v_2(t))$$

Since $v_2(t)$ is small for all t, we have

$$q(t) \approx f(v_1(t)+\left.\frac{df}{dv}\right|_{v_1} v_2(t)$$

Let

$$q_1(t) \triangleq f(v_1(t)) \qquad (3.27)$$

The charge q1(t) can be considered to be the charge due to v1(t). The remaining charge $q_2(t) \triangleq q(t)-q_1(t)$ is given approximately by

$$q_2 \approx \left.\frac{df}{dv}\right|_{v_1} v_2(t) \qquad (3.28)$$

This charge q_2 is proportional to v_2 and can be considered as the small-signal charge variation due to v_2. Since v_1 is now a given function of time $\left.\frac{df}{dv}\right|_{v_1(t)}$ can be identified as a linear time-varying capacitor $C(t)$, where

$$C(t) = \left.\frac{df}{dv}\right|_{v_1(t)}$$

A nonlinear capacitance can be modeled a a linear time-varying capacitor in the small-signal analysis.

This type of analysis is basic to understanding the parametric amplifiers.

Inductors

Inductor are used in electrical circuits because they store energy in their magnetic fields.

What is an Inductor?

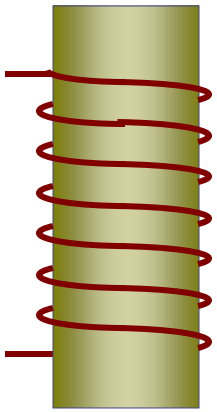

A coil of wire that can carry current

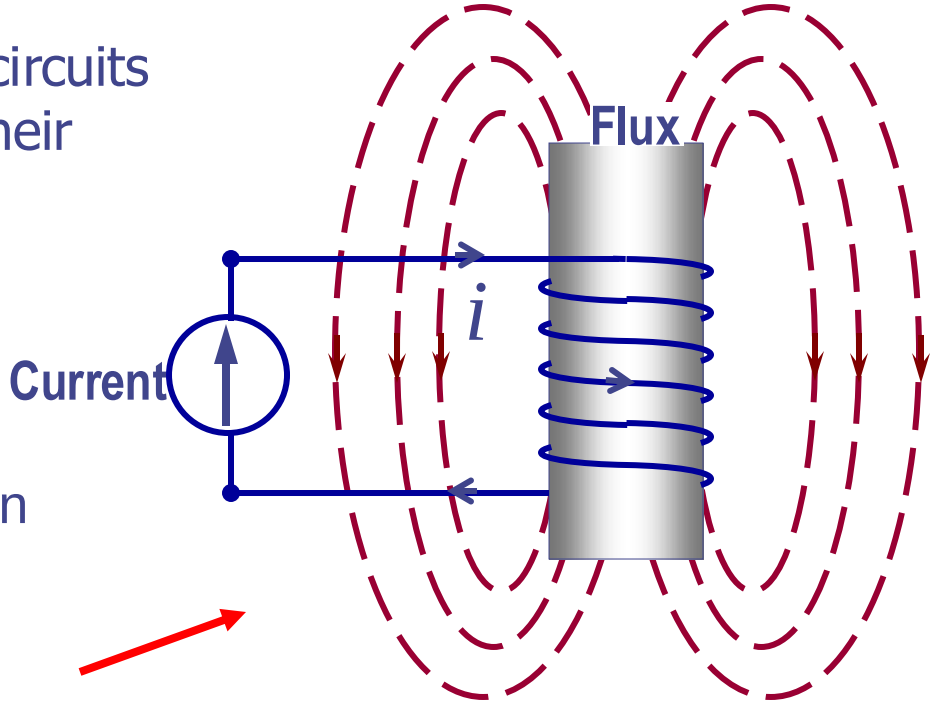

Current produces a **magnetic field**

Energy is stored in the inductor

Inductance Formula: $L = \dfrac{\mu N^2 A}{h}$

Inductor formula:

$$\phi = Li$$

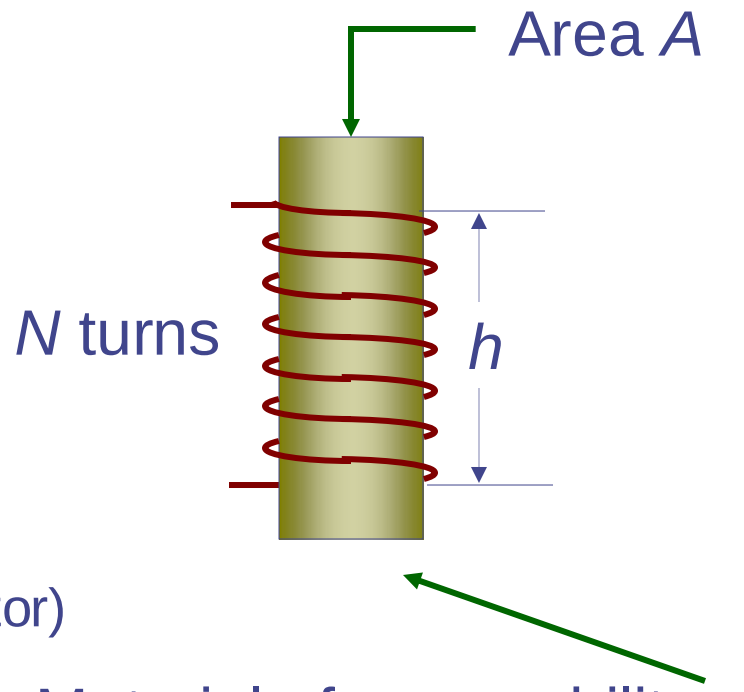

ϕ = Flux linkage in volt-sec

i = Amperes

L = Henries (physical property of inductor)

ϕ = Flux × no. of turns

$\mu_0 = 4\pi \times 10^{-7}$ henries/meter

μ can vary between μ_0 and $10{,}000\mu_0$

Inductor formula: $\phi = Li$

Definition of voltage: $v = \frac{d\lambda}{dt}$

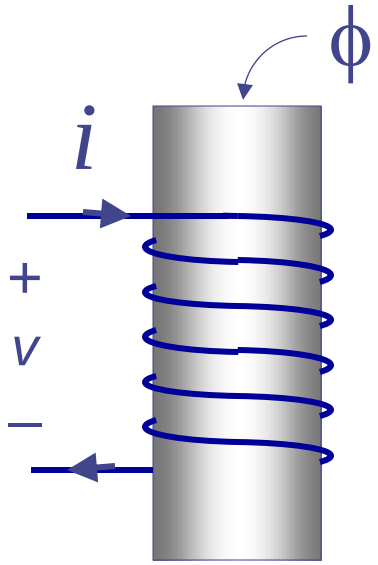

$\therefore$ $v = L\frac{di}{dt}$

The two-terminal element will be called an *inductor* if at any time t its flux $\phi(t)$ and its current $i(t)$ satisfy a relation defined by a curve in the i ϕ plane. This curve is called *the characteristic of the inductor at time* t.

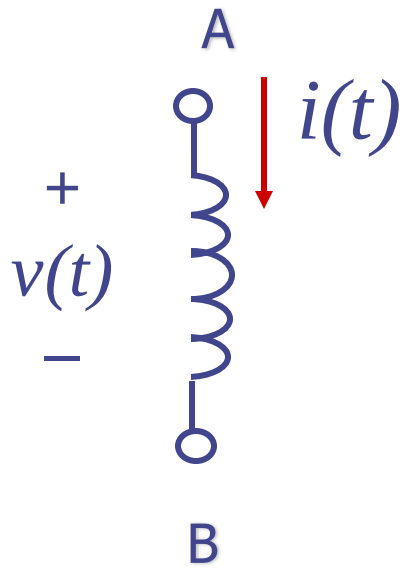

Fig.3.16 Symbol for an inductor

There is a relation between instantaneous value of the flux $\phi(t)$ and the instantaneous value of the current $i(t)$.

The voltage across the inductor (measured with reference direction (see Fig 3.16) is given by Faraday's induction law as

$$v(t) = \frac{d\phi}{dt} \qquad (3.29)$$

where v is in volts and ϕ is in webers

Let us verify that (3.29) agrees with Lenz's law which states that the electromotive force induced by a rate change of flux will have a polarity such that it will oppose the cause of that rate of change of flux.

Consider the following case: The current i increases; that is, $di/dt > 0$

The increasing current creates an increasing magnetic field; hence the flux ϕ increases; that is $d\phi/dt>0$. According to (3.29), $v(t)>0$, which means that the potential of node A is larger than the potential of node B; this is precisely the polarity required to oppose any further increase in current.

As in the case of resistors and capacitance we have a four way classification of Inductors

a) linear
b) non-linear
c) time-invariant
d) time-varying

The Linear Time-Invariant Inductor

By definition the characteristic of the linear time invariant inductor has an equation of the form

$$\phi(t) = Li(t) \tag{3.30}$$

where L is constant (independent of t and i) and is called the *inductance*.

The characteristic is a fixed straight line through the origin whose slope is L.

The equation relating the terminal voltage and current is easily obtained from (3.29) and (3.30). Thus

$$v(t) = L\frac{di}{dt} \tag{3.31}$$

Integrating Eq.(3.31) between 0 and t, we get

$$i(t) = i(0) + \frac{1}{L}\int_0^t v(t')dt' \tag{3.32}$$

Let $\Gamma \triangleq L^{-1}$, and let Γ be called the *reciprocal inductance .* Then

$$i(t) = i(0) + \Gamma \int_0^t v(t')dt' \qquad (3.33)$$

In Eqs. (3.32) and (3.33) the integral is the net area under the voltage curve between time *0* and time *t*. Clearly, the value *i* at time *t*, *i(t)*, depends on its initial value *i(0)* and on all the values of the voltage waveform *v(·)* in the interval *[0,t]*. This fact, as in the case of capacitors, is often alluded to be saying the "*inductors have memory*"

It is important that linear time invariant inductor is completely specified as a circuit element only if the inductance *L* and the initial current *i(0)* are given (see. Eq. 3.32)

It should be stressed that Eq. (3.31) defines a linear function expressing the instantaneous voltage *v(t)* in terms of the derivative of the current evaluated at time *t*. Equation (3.32) defines a function expressing *i(t)* in terms of *i(0)* and the waveform *v(·)* over the interval *[0,t]*. Only if *i(0)=0*, the function defined by (3.32) is a *linear function* which gives the value of the current *i* at time *t*, *i(t)*, in terms of the voltage waveform *v(·)* over the interval *[0,t]*.

Exercise 1

Let a current source $i_s(t)$ be connected to a linear time-invariant inductor with inductance L and $i(0)=0$.

Determine the voltage form $v(\cdot)$ across the inductor for

a. $i_s(t)=u(t)$
b. $i_s(t)=\delta(t)$

Exercise 2

Let a voltage source $v_s(t)$ be connected to a linear time-invariant inductor with inductance L and $i(0)=0$.

Determine the current form $i(\cdot)$ in the inductor for

a. $v_s(t)=u(t)$
b. $v_s(t)=\delta(t)$
c. $v_s(t)=A\cos\omega t$, where A and ω are constants

Remarks

1. Equation (3.32) states that time t the branch current $i(t)$, (where $t \geq 0$), in a linear time-invariant inductor is a sum of two terms.

The first term is the current $i(0)$ at $t=0$, that is the initial current in the inductor. The second term is the current at time t in an inductor L if at $t=0$ this inductor has zero initial current.

Thus, given any linear time-invariant inductor with an initial current $i(0)$, can be considered as the parallel connection of a dc current source $I_0=i(0)$ and the same inductor with zero initial current, as shown in Fig. 3.17

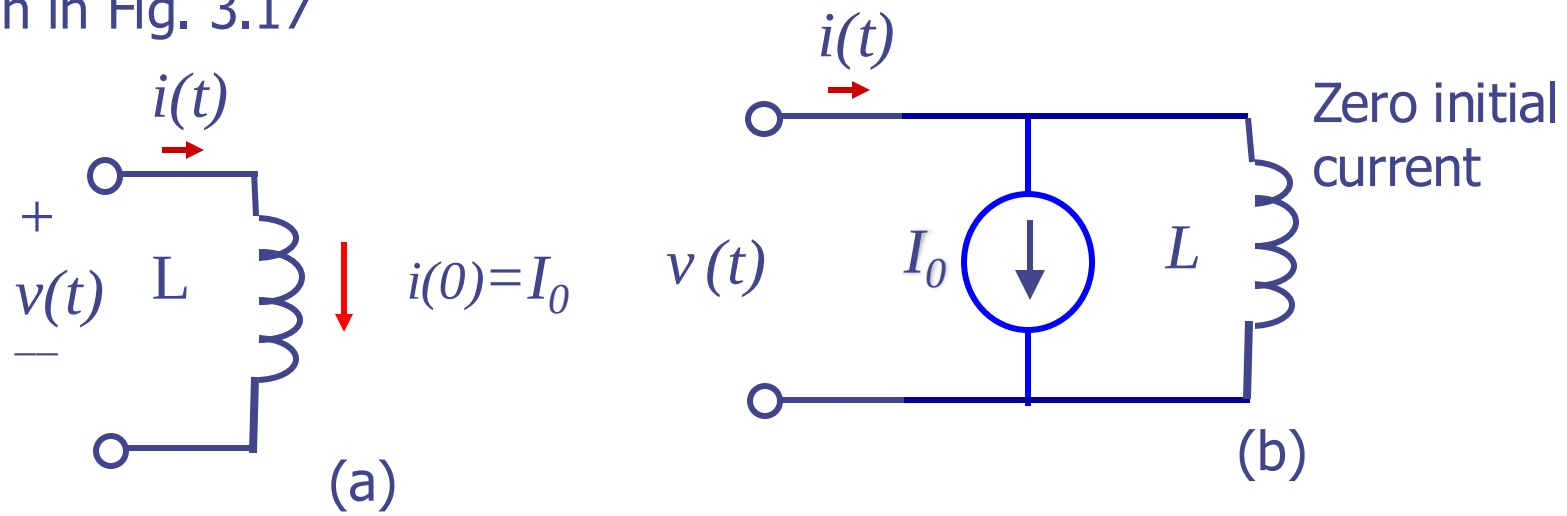

Fig. 3.17 The inductor with an initial current $i(0)=I_0$ in (a) is equivalent to the parallel connection of the same inductor with zero initial current and a constant current source I_0 in (b)

2. Consider a linear time-invariant inductor with zero initial voltage; that is, $i(0)=0$. It is connected in parallel with an arbitrary voltage current source $i_s(t)$ as shown in Fig. 3.18a. The parallel connection is equivalent to the circuit shown in Fig. 3.18b in where the same inductor is connected in series with a voltage source $v_s(t)$, and

$$v_s(t) = L\frac{di_s}{dt} \tag{3.34}$$

The current source $i_s(t)$ in Fig. 3.18a is given in terms of the voltage source $v_s(t)$, in Fig. 3.18b.

$$i_s = \frac{1}{L}\int_0^t v_s(t')dt' \tag{3.35}$$

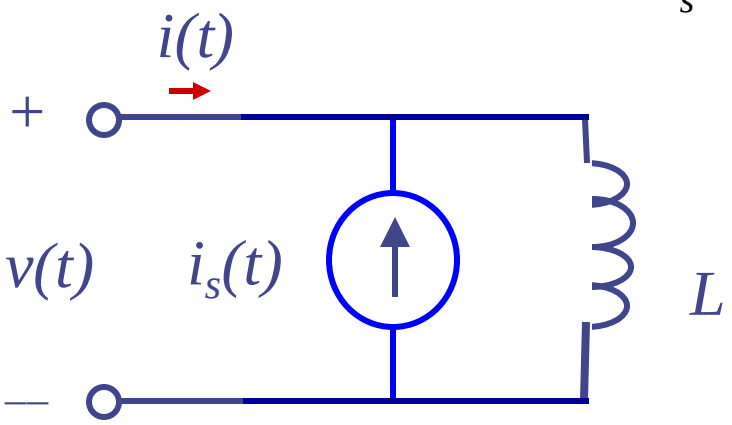

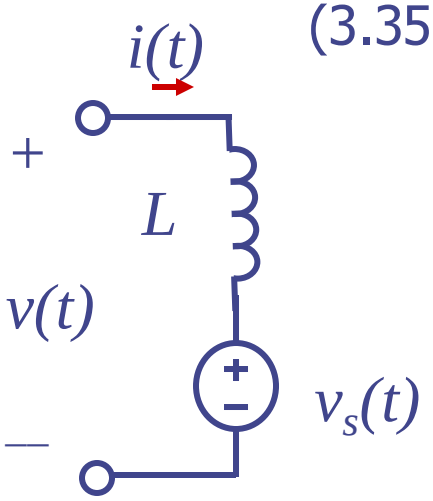

Fig. 3.18 Thevenin and Norton equivalent circuits fro a capacitor with an independent source

The results in Fig.3.18a and b are referred to as *Norton and the Thevenin equivalent circuits* respectively. In particular, if the v_s in Fig. 3.18a is a unit step function, the voltage source v_s in Fig. 3.18b is an impulse function $L\delta(t)$.

Following reasoning similar to that used in the case of capacitors, we may conclude with the following important property of inductors:

If the voltage v across a linear time-invariant inductor remains bounded for all times in the closed interval $[0,t]$, the current i is a continuous function in the open interval $(0,t)$; that is, the current in such an inductor cannot jump instantaneously from one value to a different value as long as the voltage across it remains bounded.

The Linear Time-varying Inductor

If the inductor is linear but time-varying its characteristic is at all times a straight line through the origin, but its slope depends on time. Therefore, the flux is expressed in terms of the current by

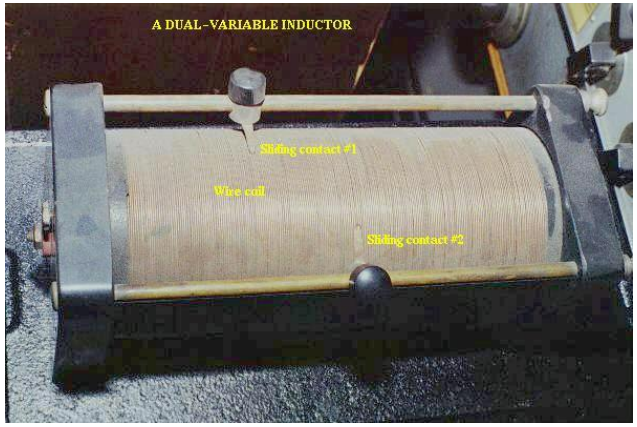

$$\phi(t) = L(t)i(t) \tag{3.36}$$

where $L(\cdot)$ is prescribed function of time. Indeed, this function $L(\cdot)$ is a part of the specification of the time-varying inductance. Equation (3.29) becomes

$$v(t) = L(t)\frac{di}{dt} + \frac{dL}{dt}i(t) \tag{3.37}$$

The Nonlinear Inductor

Most physical inductors have nonlinear characteristics. Only for certain specific ranges of currents can inductors be modeled by linear time invariant inductors. A typical characteristic of physical inductor is shown in Fig.3.19.

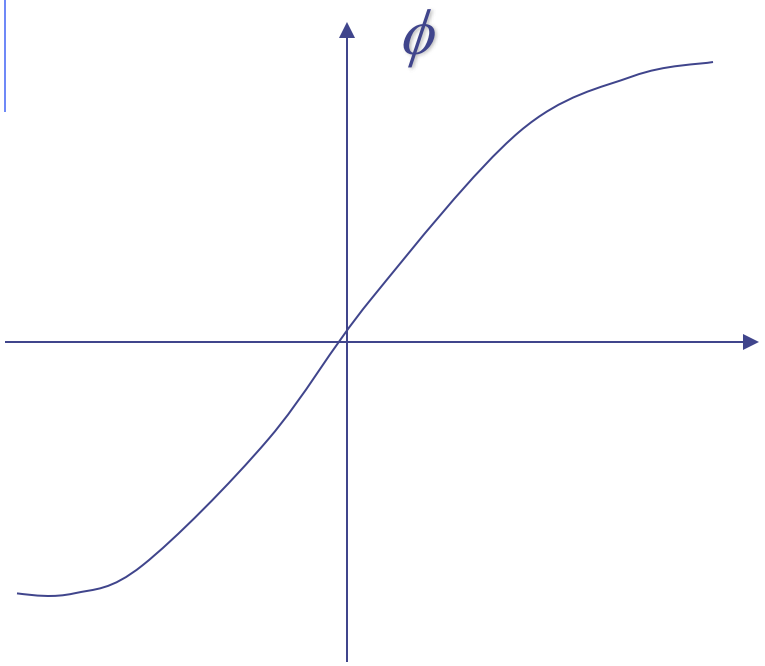

Fig.3.19 Characteristic of a nonlinear inductor

Example

Suppose the characteristic of a nonlinear time-invarint inductor can be represented by

$$\phi = \tanh i$$

Let us calculate the voltage across the inductor, where the current is sinusoidal and is given by

$$i(t) = A\cos\omega t$$

The flux is thus

$$\phi(t) = \tanh(A\cos\omega t)$$

By (3.29) we have

$$v(t) = \frac{d}{dt}\phi(i(t)) = \left.\frac{d\phi}{di}\right|_{i(t)} \frac{di}{dt} = \left.\frac{d\tanh i}{di}\right|_{i(t)} \frac{dA\cos\omega t}{dt}$$

$$= \frac{1}{\cosh^2(A\cos\omega t)}(-A\omega\sin\omega t)$$

We conclude that

$$v(t) = -A\omega\frac{\sin\omega t}{\cosh^2(A\cos(\omega t)}$$

Thus the amplitude A and the angular frequency ω of the current,the voltage across the inductor is completely specified as a function of time.

Hysteresis

A special type of nonlinear inductor, such as a ferromagnetic-core inductor, has a characteristic that exhibits the *hyteresis phenomenon.* In terms of the current-flux plot, a hysteresis charcteristic is shown in Fig.3.20.

Assume that we start at the origin in the $i\phi$ plane; as current ia increased, the flux builds up to curve 1. etc.,

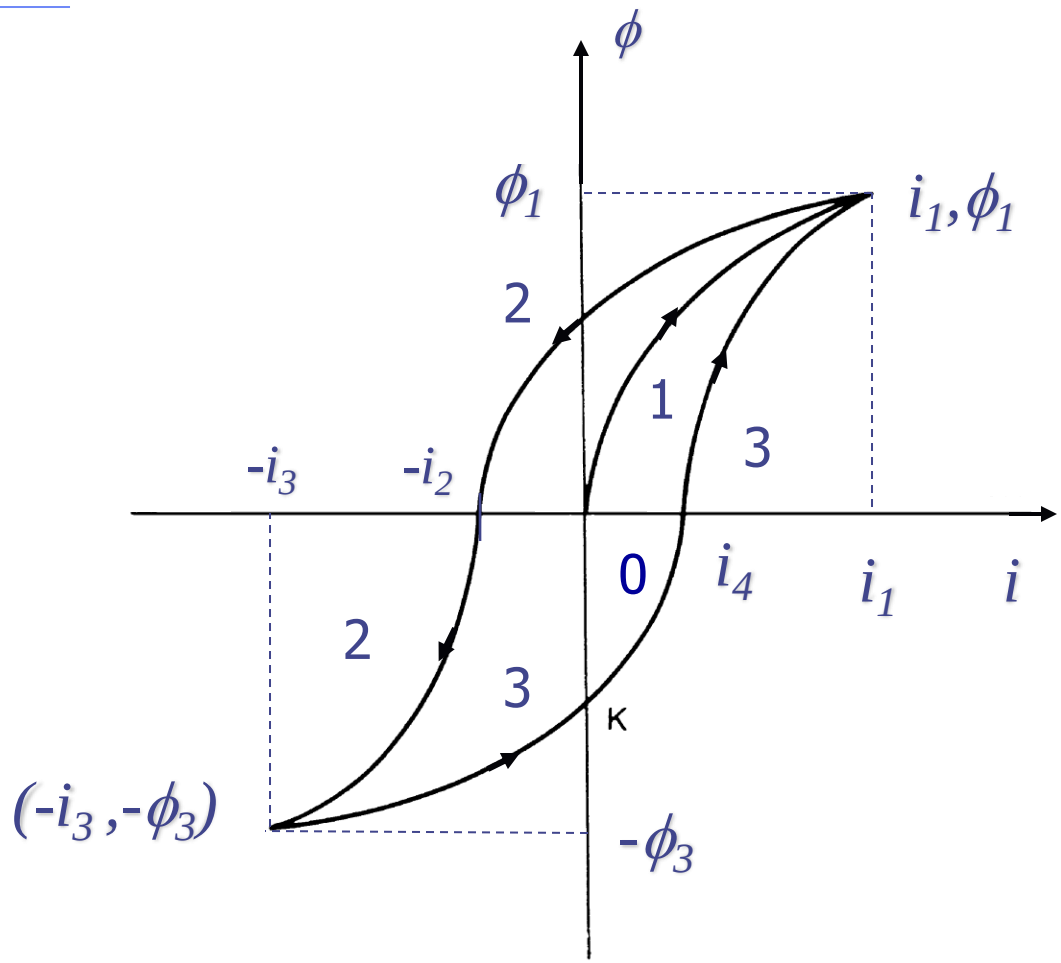

Fig.3.20 Hysteresis phenomenon

Table 3.1. Summary of Four-way Classification of Two-terminal Elements

	Linear		**Nonlinear**	
	Time-invariant	Time varying	Time-invariant	Time varying
Resistors 	$v(t) = Ri(t)$ $i(t) = Gv(t)$ $R = 1/G$	$v(t) = R(t)i(t)$ $i(t) = G(t)v(t)$ $R(t) = 1/G(t)$	$v(t) = f(i(t))$ Current-controlled $i(t) = g(v(t))$ Voltage-controlled	$v(t) = f(i(t),t)$ Current-controlled $i(t) = g(v(t),t)$ Voltage-controlled
Capacitors $i = \frac{dq}{dt}$ 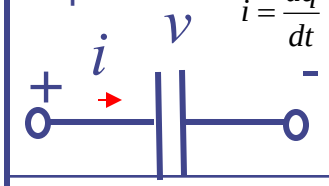	$q(t) = Cv(t)$ $i(t) = C\frac{dv}{dt}$ $v(t) = v(0) + \frac{1}{C}\int_0^t i(t')dt'$	$q(t) = C(t)v(t)$ $i(t) = \frac{dC}{dt}v(t) + C(t)\frac{dv}{dt}$	$q(t) = f(v(t))$ $i(t) = \left.\frac{df}{dv}\right\|_{v(t)} \frac{dv}{dt}$	$q(t) = f(v(t),t)$ $i(t) = \frac{\partial f}{\partial t} + \left.\frac{\partial f}{\partial v}\right\|_{v(t)} \frac{dv}{dt}$
Inductors $v = \frac{d\phi}{dt}$ 	$\phi(t) = Li(t)$ $v(t) = L\frac{di}{dt}$ $i(t) = i(0) + \frac{1}{L}\int_0^t v(t')dt'$	$\phi(t) = L(t)i(t)$ $v(t) = \frac{dL}{dt}i(t) + L(t)\frac{di}{dt}$	$\phi(t) = f(i(t))$ $v(t) = \left.\frac{df}{dv}\right\|_{i(t)} \frac{di}{dt}$	$\phi(t) = f(i(t),t)$ $v(t) = \frac{\partial f}{\partial t} + \left.\frac{\partial f}{\partial v}\right\|_{i(t)} \frac{di}{dt}$

Lecture 4

- Power and Energy.
- Powered entering a resistor, passivity.
- Energy stored in time-invariant capacitors.
- Energy stored in time-invariant inductors.
- Physical components versus circuit elements.

Energy in two terminal circuit

Suppose that we have a circuit, and from this circuit we draw two wires which we connect to another circuit which we call a generator (See Fig. 4.1). We shall call such a cicuit a *two-terminal circuit* since we are only interted 9in the voltage and teh current at the two terminals and the power transfere that occurs at these terminals.

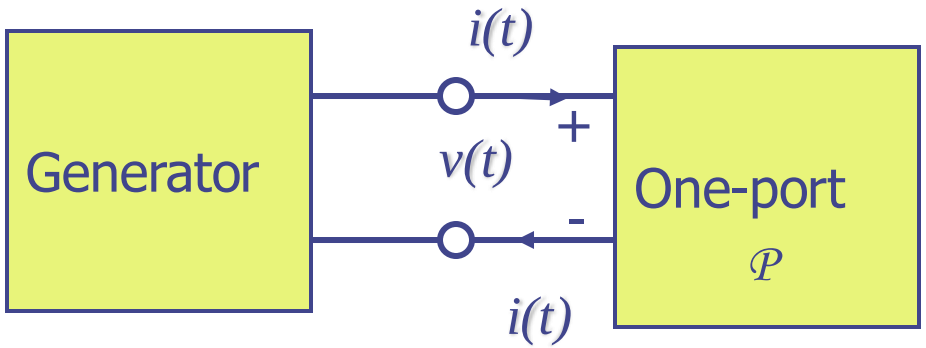

Fig. 4.1 Instantaneous power entering the one-port $\mathcal{P}$ at time t is $p(t) = v(t)i(t)$

In modern terminology a two-terminal circuit is called a ***one-port***.

The term one-port is appropriate since by port we mean a pair of terminals of a circuit in which, at all times,

the instantaneous current flowing into one terminal is equal to the instantaneous current flowing out of the other.

The current $i(t)$ entering the top terminal of the one-port $\mathcal{P}$ is equal to the current $i(t)$ leaving the bottom terminal of teh one-port $\mathcal{P}$.

The current $i(t)$ entering the port is called the *port current*, and the voltage $v(t)$ across the port is called the *port voltage*.

It is a fundamental fact of physics that the *instantaneous power entering the one-port is equal to the product of the port voltage and the port current* provided the reference directions of the port voltage and the port current are associated reference directions as indicated in Fig. 4.1.

Let $p(t)$ denote the instantaneous power in watts delivered by the generator to the one-port at time t. Then

$$p(t) = v(t)i(t) \tag{4.1}$$

Where v is in volts and i is in amperes. Since the energy (in joules) is the integral of power (in watts), it is follows that the energy delivered by the generator to the one-port from t_0 to time t is

$$W(t_0, t) = \int_{t_0}^{t} p(t')dt' = \int_{t_0}^{t} v(t')i(t')dt' \tag{4.2}$$

Power Entering a resistor, Passivity

Since a resistor is characterized by a curve in the *vi* plane or *iv* plane, the instantaneous power entering a resistor at time *t* is uniquely determined once the operating point $(i(t), v(t))$ on the characteristic is specified, the instantaneous power is equal to the are of the rectangle formed by the operating point and the axes of the *iv* plane as shown in Fig. 4.2.

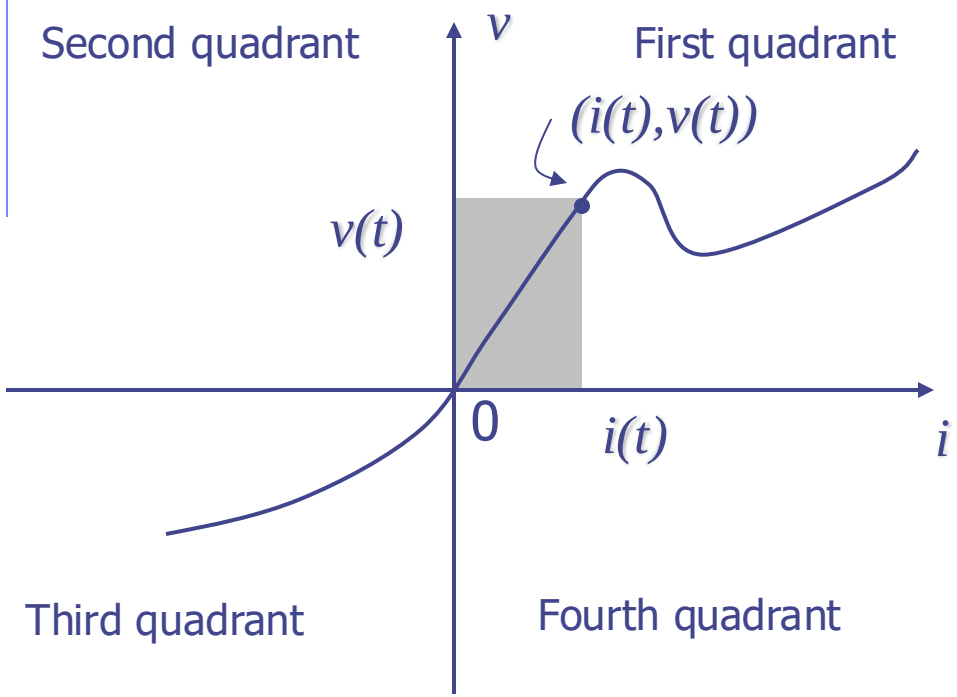

Fig. 4.2. The power entering the resistor at time *t* is $v(t)i(t)$

If the operating point is in the first or third quadrant (hence $iv>0$), the power entering the resistor is positive, that is the resistor receives power from the outside world.

If the operating point is in the second or fourth quadrant (hence $iv<0$), the power entering the resistor is negative; that is the resistor delivers power to the outside world

A resistor is passive if for all time t the characteristic lies in the first and third quadrants. Here the first and third quadrants include the i axis and the v axis. The geometrical constraint on the characteristic of a passive resistor is equivalent to $p(t) \geq 0$ at all times irrespective of the current waveform through the resistor. This is the fundamental property of passive resistors: *a passive resistor never delivers power to the outside world.*

A resistor is said to be active if it is not passive. Any voltage source for example (for which v_s is not identically zero) and any current source (for which i_s is not identically zero) is an active resistor since its characteristic at all time is parallel to either the i axis or the v axis, and thus it is not restricted to the first and third quadrant.

A linear resistor is active if and only if $R(t)$ is negative for some time t.

Energy stored in Time-invariant Capacitor

Let us apply Eq.(4.2) to calculate the energy stored in a capacitor. For simplicity we assume that it is time-invariant, but it can be nonlinear.

Suppose that one-port of Fig. 4.1, which is connected to the generator is a capacitor. The current through the capacitor is

$$i(t) = \frac{dq}{dt} \tag{4.3}$$

Let the capacitor characteristic be described by the function $\hat{v}(\cdot)$

$$v = \hat{v}(q) \tag{4.4}$$

The energy delivered by the generator to the capacitor from time t_0 to t is then

$$W(t_0, t) = \int_{t_0}^{t} v(t')i(t')dt' = \int_{q(t_0)}^{q(t)} \hat{v}(q_1)dq_1 \tag{4.5}$$

To obtain (4.5) we first used (4.3) and wrote $i(t')dt' = dq_1$ according to (4.3), where q_1 is a dummy integration variable representing the charge.

We used (4.4) to express the voltage $v(t')$ by the characteristic of the capacitor, i.e. function $\hat{v}(\cdot)$ in terms of the integration variable q

Let us assume that the capacitor is initially uncharged; that is $q(t_0)=0$ [1]

It is natural to use the uncharged state of the capacitor as the state corresponding to zero energy stored in the capacitor. Since the capacitor stores energy but not dissipate it, we conclude that the energy stored at time t, $\mathcal{E}_E(t)$, is equal to the energy delivered to the capacitor by the generator from time t_0 to t, $W(t_0,t)$. Thus, the *energy stored in the capacitor* is, from (4.5)

$$\mathcal{E}_E(t) = \int_0^{q(t)} \hat{v}(q_1)\,dq_1 \qquad (4.6)$$

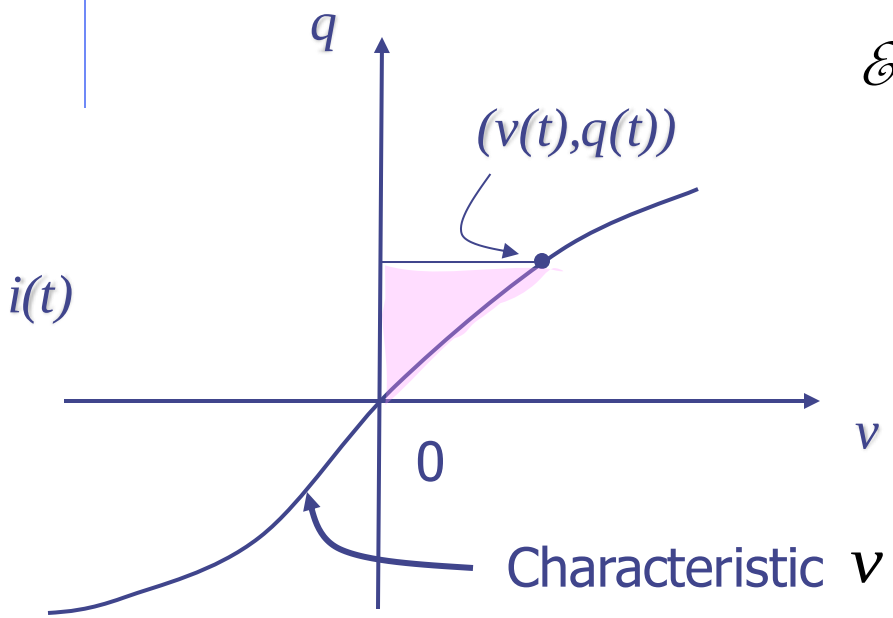

In terms of the capacitor characteristic on the vq plane the shaded area represents the energy stored above the curve.

Fig. 4.3. The shaded area gives the energy stored at time t in the capacitor

Obviously, if the characteristic passes through the origin of the *vq* plane and lies in the first and third quadrant, the stored energy is always nonnegative. A capacitor is said to be passive if its stored energy is always nonnegative. For a linear time-invariant capacitor, the equation on the characteristic is

$$q = Cv \tag{4.7}$$

Where C is a constant independent of t and v. Equation (4.6) reduces to the familiar expression

$$E_E(t) = \int_0^{q(t)} \hat{v}(q_1)\,dq_1 = \tfrac{1}{2}\frac{q^2(t)}{C} = \tfrac{1}{2}Cv^2(t) \tag{4.8}$$

Accordingly, a linear time-invariant capacitor is passive if its capacitance is nonnegative and active if its capacitance is negative.

An active capacitor stores negative energy; that is, it can deliver energy to the outside.???

Energy Stored in Time-invariant inductors.

The calculation of the energy stored in an inductor is very similar to the same calculation for the capacitor.

For an inductor Faraday's law states that

$$v(t) = \frac{d\phi}{dt} \tag{4.9}$$

Let the inductor characteristic be described by the function $\hat{i}(\cdot)$

$$i = \hat{i}(\phi) \tag{4.10}$$

Let the inductor be the one-port that is connected the generator in Fig. 4.1. Then the energy delivered by the generator to the inductor from time t_0 to t is

$$W(t_0, t) = \int_{t_0}^{t} v(t')i(t')dt' = \int_{\phi(t_0)}^{\phi(t)} \hat{i}(\phi_1)d\phi_1 \tag{4.11}$$

To obtain (4.11) we used (4.9) and wrote $v(t')dt' = d\phi_1$, where the dummy integration variable ϕ_1 represents flux. Equation (4.10) was used to express current in terms of flux.

Let us assume that initially the flux is zero; that is $\phi(t_0)=0$

Again choosing this state of the inductor to be the state corresponding to zero energy stored, and observing that an inductor stores energy but not dissipate it, we conclude that the magnetic energy stored at time t, $\mathcal{E}_M(t)$, is equal to the energy delivered to the inductor by the generator from time t_0 to t, $W(t_0,t)$. Thus, the *energy stored in the inductor* is

$$E_M(t) = \int_0^{\phi(t)} \hat{i}(\phi_1)\, d\phi_1 \qquad (4.12)$$

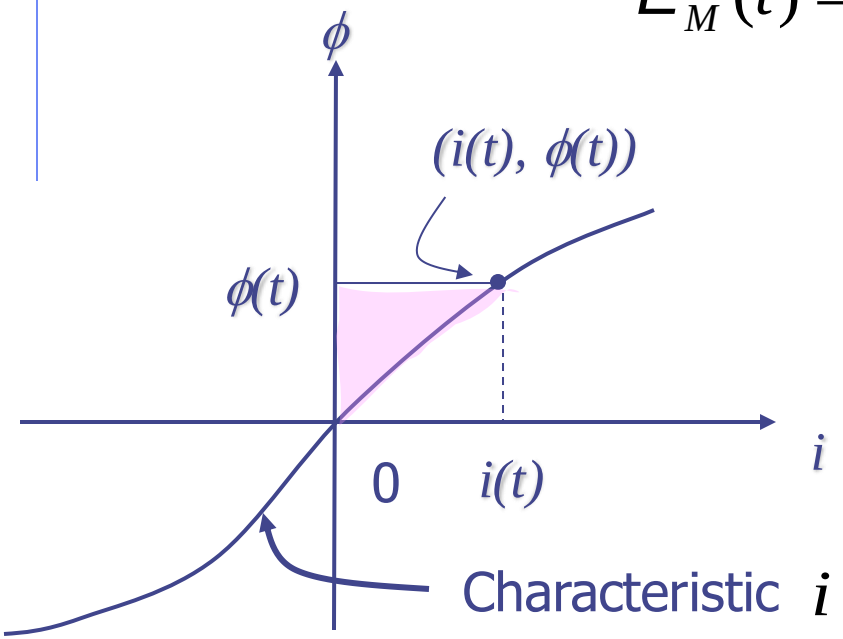

In terms of the inductor characteristic on the $i\phi$ plane, the shaded area represents the energy stored above the curve.

Fig. 4.4. The shaded area gives the energy stored at time t in the inductor

Similarly, if the characteristic in the $i\phi$ plane passes through the origin and lies in the first and third quadrant, the stored energy is always nonnegative. An inductor is said to be *passive* if its stored energy is always nonnegative. A linear time-invariant inductor has a characteristic of the form

$$\phi = Li \tag{4.13}$$

where L is a constant independent of t and i. Hence Eq. (4.12) leads to the familiar form

$$E_M(t) = \int_0^{\phi(t)} \frac{\phi_1}{L} d\phi_1 = \tfrac{1}{2}\frac{\phi^2(t)}{L} = \tfrac{1}{2} Li^2(t) \tag{4.14}$$

Accordingly, a linear time-invariant inductor is passive if its inductance is nonnegative and active if its inductance is negative.

Energy Storage Elements

- *Capacitors* store energy in an electric field
- *Inductors* store energy in a magnetic field
- Capacitors and inductors are passive elements:
  - Can store energy supplied by circuit
  - Can return stored energy to circuit
  - Cannot supply more energy to circuit than is stored
- Voltages and currents in a circuit without energy storage elements are linear combinations of source voltages and currents
- Voltages and currents in a circuit with energy storage elements are solutions to linear, constant coefficient *differential equations*

How does it work?

How we can store the energy?

Energy stored in a capacitor ...

$$E_E(t) = \tfrac{1}{2} C v^2(t)$$

... energy density...

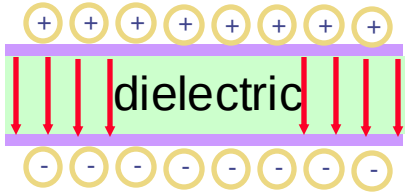

$$u_{\text{electric}} = \frac{1}{2}\varepsilon_0 E^2$$

Energy stored in an inductor ....

$$E_M(t) = \tfrac{1}{2} L i^2(t)$$

... energy density ...

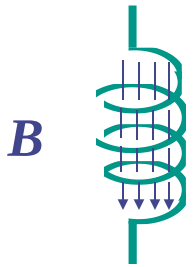

$$u_{\text{magnetic}} = \frac{1}{2}\frac{B^2}{\mu_0}$$

General Review

- Electrostatics
  - motion of "q" in external E-field
  - E-field generated by Σq_i
- Magnetostatics
  - motion of "q" and "I" in external B-field
  - B-field generated by "I"
- Electrodynamics
  - time dependent B-field generates E-field
    - AC circuits, inductors, transformers, etc.
  - time dependent E-field generates B-field
    - electromagnetic radiation - *light!*

Energy Storage in Capacitors

$$w_C(t) = \int_{-\infty}^{t} vi\, d\tau = \int_{-\infty}^{t} v\left(C\frac{dv}{d\tau}\right)d\tau = \int_{-\infty}^{t} Cv\, dv = \frac{1}{2}Cv^2(t)$$

- The energy accumulated in a capacitor is stored in the electric field located between its plates
- An electric field is defined as the position-dependent force acting on a unit positive charge
- Mathematically,
- where $v(-\infty) = 0$
- Since $w_c(t) \geq 0$, the capacitor is a passive element
- The ideal capacitor does not dissipate any energy
- The net energy supplied to a capacitor is stored in the electric field and can be fully recovered

Inductor

- An inductor is a two-terminal device that consists of a coiled conducting wire wound around a core
- A current flowing through the device produces a magnetic flux φ forms closed loops threading its coils
- Total flux linked by N turns of coils, flux linkage $\lambda = N\varphi$
- For a linear inductor, $\lambda = Li$
- L is the inductance
- Unit: Henry (H) or (V•s/A)

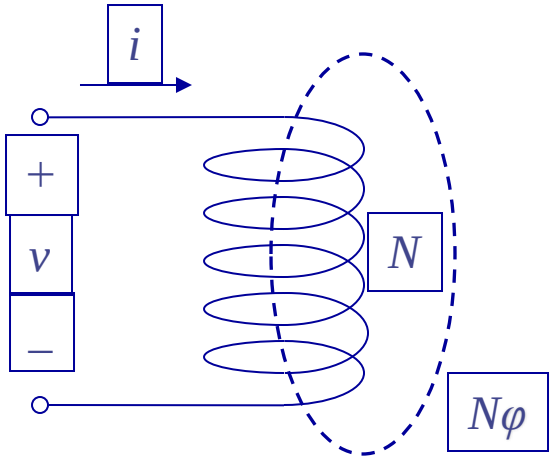

- Induction Effects
- Faraday's Law (Lenz' Law)
  - Energy Conservation with induced currents?
- Faraday's Law in terms of Electric Fields
- Cool Applications

Faraday's Law

Define the flux of the magnetic field through an *open* surface as:

$$\Phi_B \equiv \int \vec{B} \bullet d\vec{S}$$

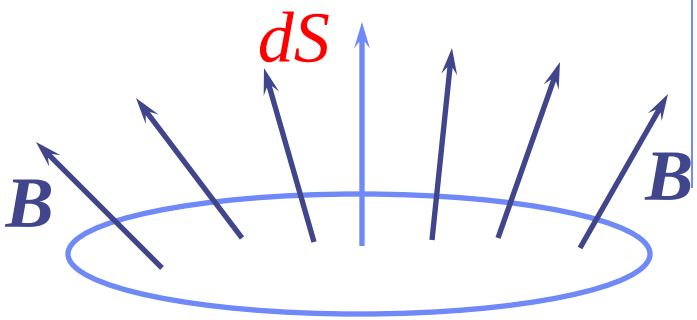

Faraday's Law:

The emf ε induced in a circuit is determined by the time rate of change of the magnetic flux through that circuit.

$$\varepsilon = -\frac{d\Phi_B}{dt}$$

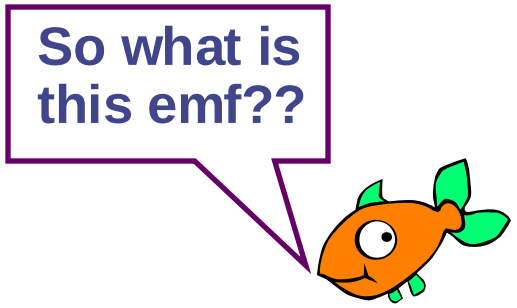

The minus sign indicates direction of induced current (given by Lenz's Law).

emf

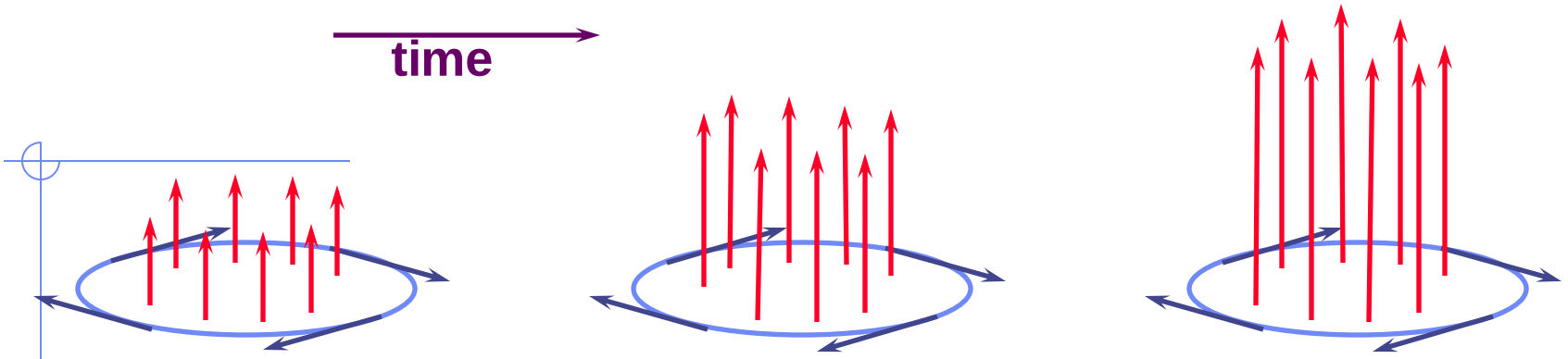

A magnetic field, increasing in time, passes through the blue loop

An electric field is generated "ringing" the increasing magnetic field

Circulating E-field will drive currents, just like a voltage difference

Loop integral of E-field is the "emf"

$$\varepsilon = \oint \vec{E} \bullet d\vec{l}$$

Note: The loop does not have to be a wire—**the emf exists even in vacuum**! When we put a wire there, the electrons respond to the emf → current.

Lenz's Law

- **Lenz's Law:**

  The induced current will appear in such a direction that it opposes the change in flux that produced it.

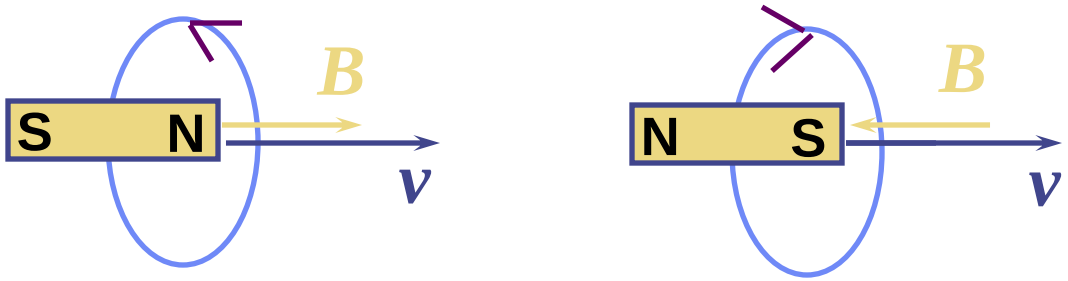

- Conservation of energy considerations:

  Claim: Direction of induced current must be so as to oppose the change; otherwise conservation of energy would be violated.

  - Why???
    - If current reinforced the change, then the change would get bigger and that would in turn induce a larger current which would increase the change, etc..

Preflight 16:

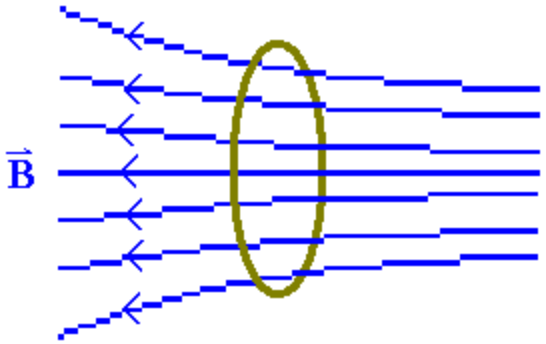

A copper loop is placed in a non-uniform magnetic field. The magnetic field does not change in time. You are looking from the right.

2) Initially the loop is stationary. What is the induced current in the loop?

a) zero
b) clockwise
c) counter-clockwise

3) Now the loop is moving to the right, the field is still constant. What is the induced current in the loop?

a) zero
b) clockwise
c) counter-clockwise

$$\varepsilon = -\frac{d\Phi_B}{dt}$$

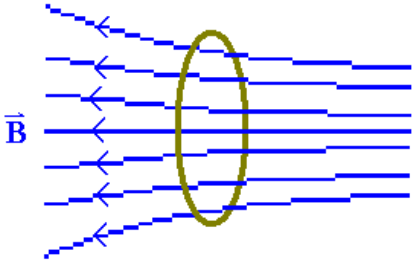

When the loop is stationary: the flux through the ring does not change!!!
$\Rightarrow d\Phi/dt = 0$ $\Rightarrow$ there is no emf induced and no current.

When the loop is moving to the right: the magnetic field at the position of the loop is increasing in magnitude. $\Rightarrow |d\Phi/dt| > 0$
$\Rightarrow$ there is an emf induced and a current flows through the ring.

Use Lenz' Law to determine the direction: The induced emf (current) opposes the change!
The induced current creates a B field at the ring which opposes the increasing external B field.

Preflight 16:

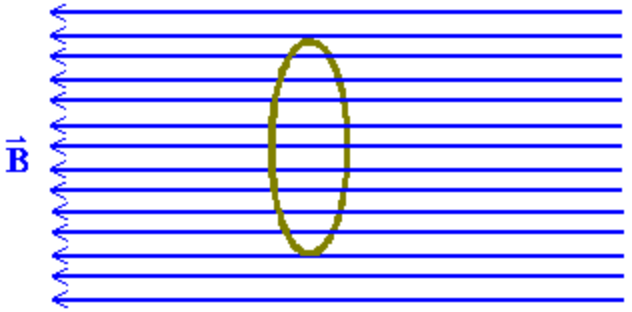

5) The ring is moving to the right. The magnetic field is uniform and constant in time. You are looking from right to left. What is the induced current?

a) zero
b) clockwise
c) counter-clockwise

6) The ring is stationary. The magnetic field is decreasing in time. What is the induced current?

a) zero
b) clockwise
c) counter-clockwise

$$\varepsilon = -\frac{d\Phi_B}{dt}$$

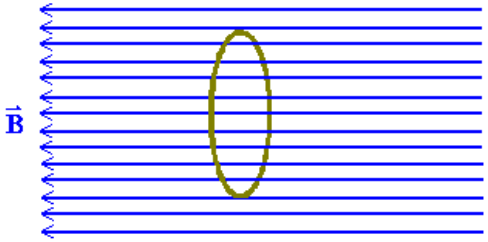

When B is decreasing:

dB/dt is nonzero $\Rightarrow$ $d\Phi/dt$ must also be nonzero, so there is an emf induced.

Lenz tells us: the induced emf (current) opposes the change.

B is decreasing at the position of the loop, so the induced current will try to keep the external *B* field from decreasing
$\Rightarrow$ the *B* field created by the induced current points in the same direction as the external *B* field (to the left)
$\Rightarrow$ the current is clockwise!!!

- A conducting rectangular loop moves with constant velocity v in the $+x$ direction through a region of constant magnetic field B in the $-z$ direction as shown.
  - What is the direction of the induced current in the loop?

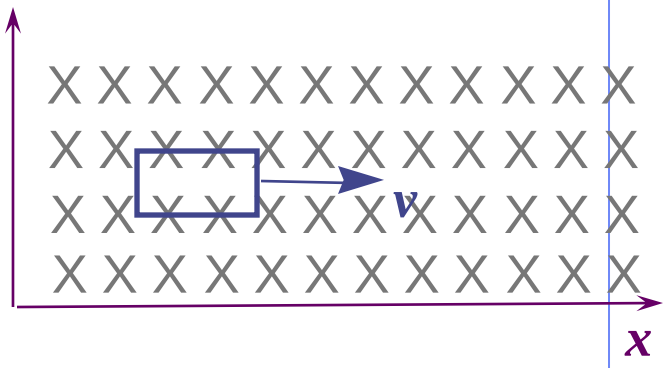

(a) ccw (b) cw (c) no induced current

- **A conducting rectangular loop moves with constant velocity v in the $-y$ direction and a constant current I flows in the $+x$ direction as shown.**
  - **What is the direction of the induced current in the loop?**

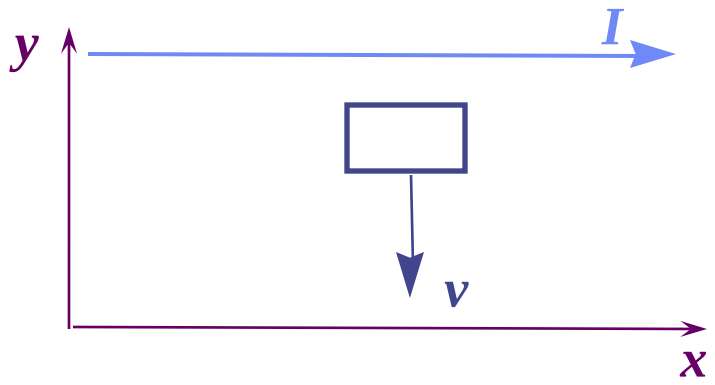

(a) ccw (b) cw (c) no induced current

- A conducting rectangular loop moves with constant velocity v in the $+x$ direction through a region of constant magnetic field B in the $-z$ direction as shown.

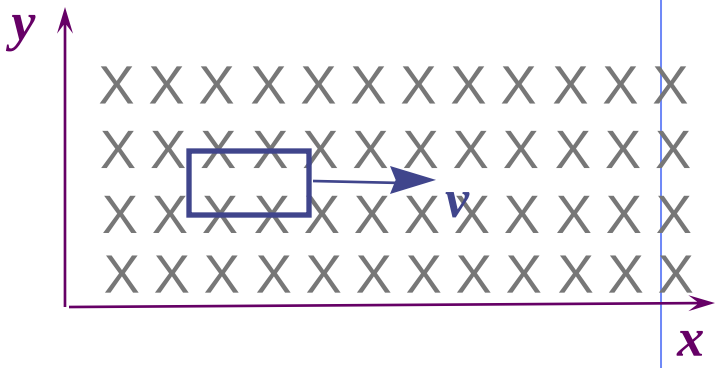

2A

- What is the direction of the induced current in the loop?

(a) ccw **(b) cw** **(c) no induced current**

- There is a non-zero flux Φ_B passing through the loop since B is perpendicular to the area of the loop.

- Since the velocity of the loop and the magnetic field are CONSTANT, however, this flux DOES NOT CHANGE IN TIME.

- Therefore, there is NO emf induced in the loop; NO current will flow!!

2B

• **A conducting rectangular loop moves with constant velocity v in the $-y$ direction and a constant current I flows in the $+x$ direction as shown.**

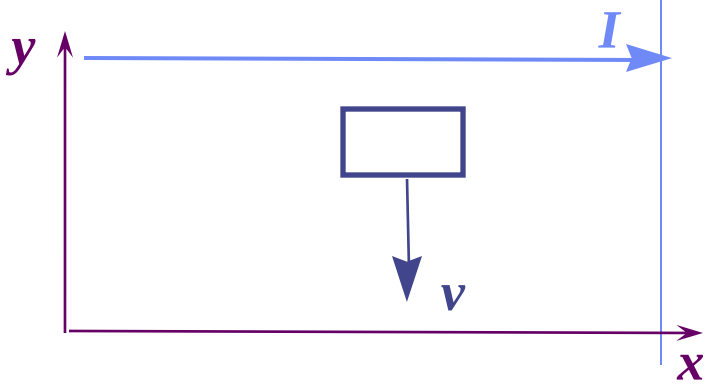

• **What is the direction of the induced current in the loop?**

(a) ccw **(b) cw** **(c) no induced current**

• The flux through this loop DOES change in time since the loop is moving from a region of higher magnetic field to a region of lower field.

• Therefore, by Lenz' Law, an emf will be induced which will oppose the change in flux.

• Current is induced in the clockwise direction to restore the flux.

Demo E-M Cannon

- Connect solenoid to a source of alternating voltage.
- The flux through the area ⊥ to axis of solenoid therefore changes in time.

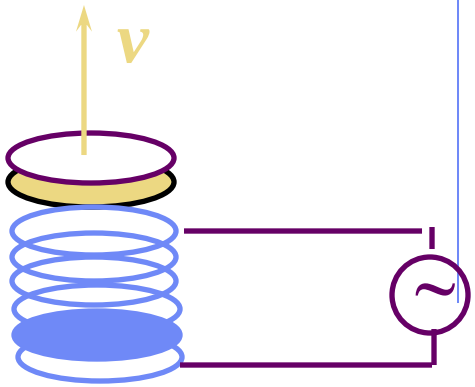

side view

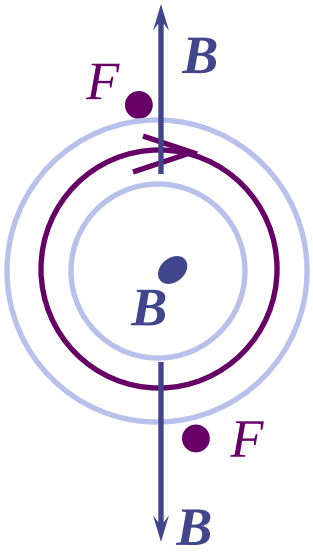

top view

- Connect solenoid to a source of alternating voltage.
- The flux through the area ⊥ to axis of solenoid therefore changes in time.
- A conducting ring placed on top of the solenoid will have a current induced in it opposing this change.

- There will then be a force on the ring since it contains a current which is circulating in the presence of a magnetic field.

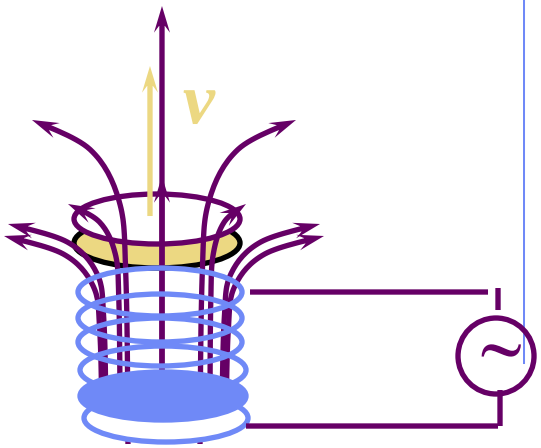

side view

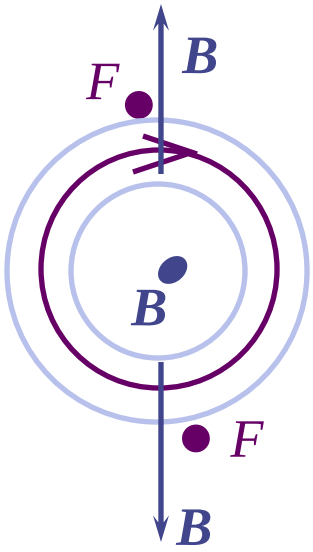

top view

Figure 5.24 Illustrating Lenz's law—conductor moving

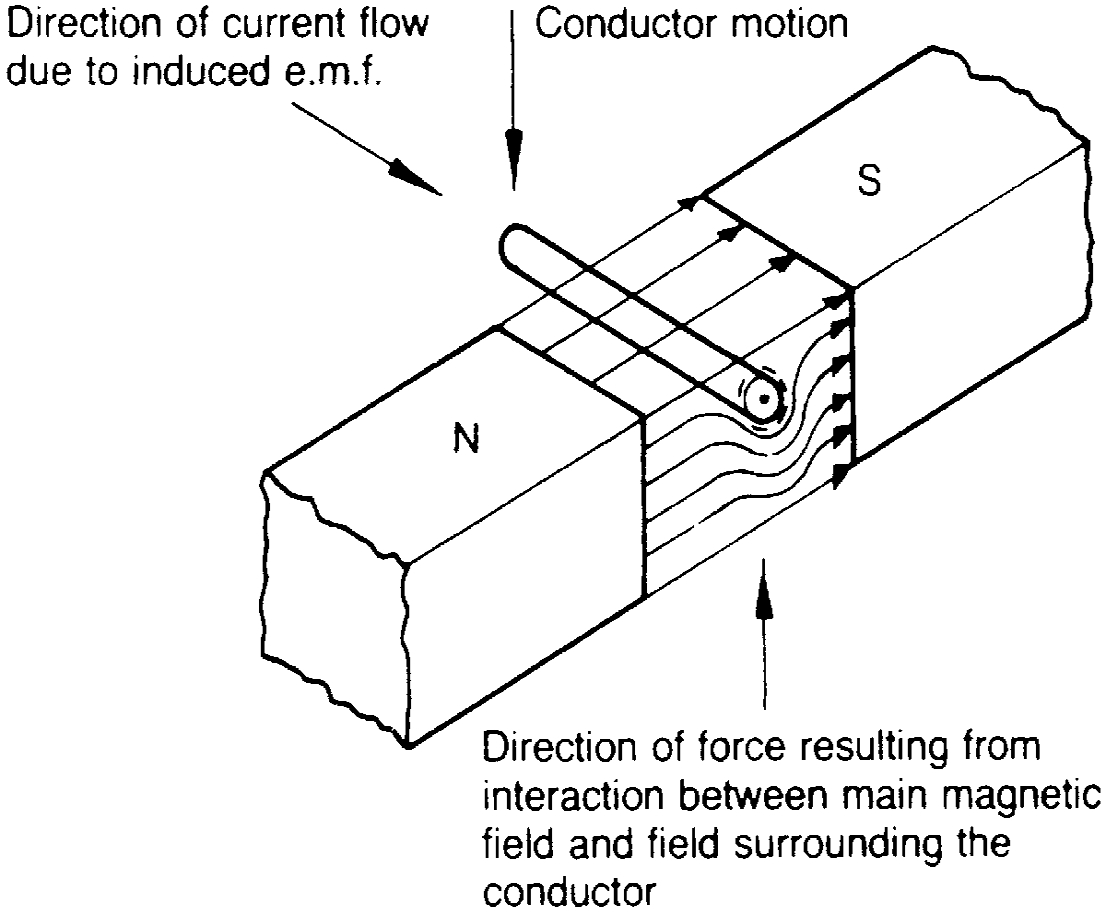

Preflight 16:

A copper ring is released from rest directly above the north pole of a permanent magnet.

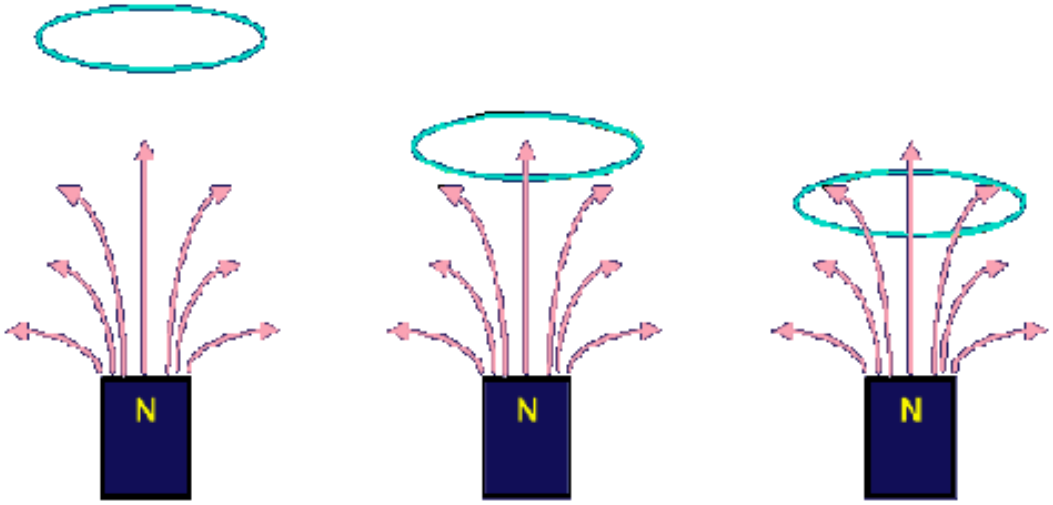

8) Will the acceleration of the ring be any different, than it would be under gravity alone?

a) $a > g$ b) $a = g$ c) $a < g$

d) $a = g$ but there is a sideways component a

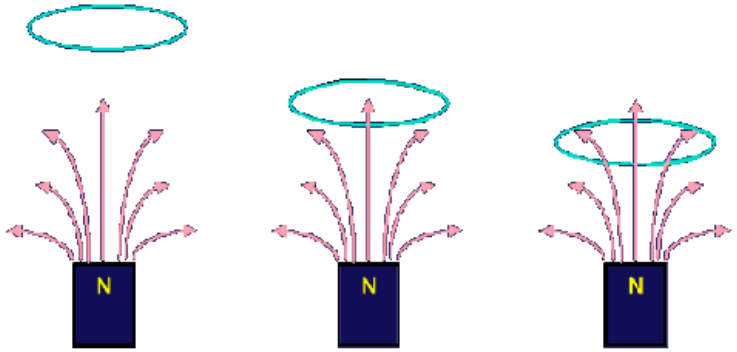

When the ring falls towards the magnet, the B field at the position of the ring is increasing.

The induced current opposes the increasing B field, so that the B field due to the induced current is in the opposite direction (down) to the external B field (up).

A current loop is itself a magnetic dipole. Here the current loop's north pole points towards the magnet's north pole resulting in a repulsive force (up).

Since gravity acts downward, the net force on the ring is reduced, hence $a < g$

- For this act, we will predict the results of variants of the electromagnetic cannon demo which you just observed.

3A

  - Suppose two aluminum rings are used in the demo; Ring 2 is identical to Ring 1 except that it has a small slit as shown. Let F_1 be the force on Ring 1; F_2 be the force on Ring 2.

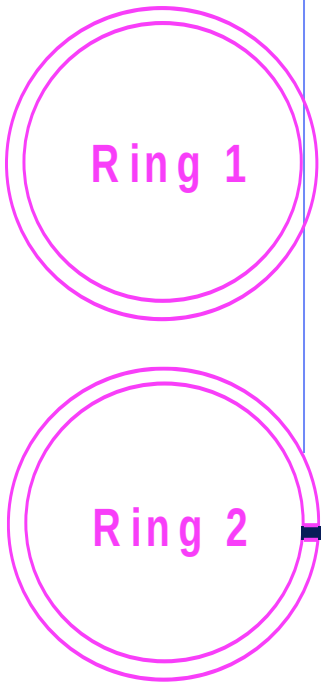

(a) $F_2 < F_1$ **(b) $F_2 = F_1$** **(c) $F_2 > F_1$**

3B

– Suppose two identically shaped rings are used in the demo. Ring 1 is made of copper (resistivity = 1.7X10^{-8} Ω-m); Ring 2 is made of aluminum (resistivity = 2.8X10^{-8} Ω-m). Let F_1 be the force on Ring 1; F_2 be the force on Ring 2.

(a) $F_2 < F_1$ **(b) $F_2 = F_1$** **(c) $F_2 > F_1$**

3A

- For this act, we will predict the results of variants of the electromagnetic cannon demo which you just observed.
  - Suppose two aluminum rings are used in the demo; Ring 2 is identical to Ring 1 except that it has a small slit as shown. Let F_1 be the force on Ring 1; F_2 be the force on Ring 2.

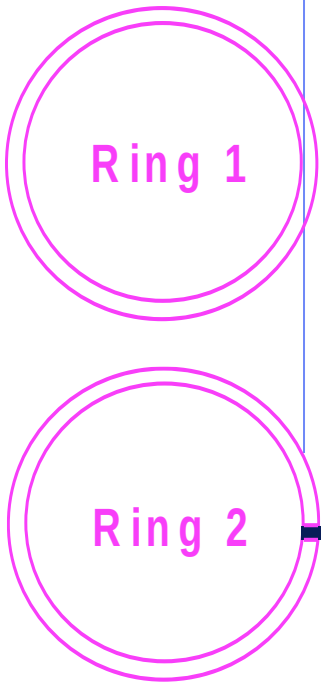

(a) $F_2 < F_1$ (b) $F_2 = F_1$ (c) $F_2 > F_1$

- The key here is to realize exactly how the force on the ring is produced.
- A force is exerted on the ring because a current is flowing in the ring and the ring is located in a magnetic field with a component perpendicular to the current.
- An emf is induced in Ring 2 equal to that of Ring 1, but NO CURRENT is induced in Ring 2 because of the slit!
- Therefore, there is NO force on Ring 2!

3B

- For this act, we will predict the results of variants of the electromagnetic cannon demo which you just observed.
  - Suppose two identically shaped rings are used in the demo. Ring 1 is made of copper (resistivity = $1.7\text{X}10^{-8}\ \Omega$-m); Ring 2 is made of aluminum (resistivity = $2.8\text{X}10^{-8}\ \Omega$-m). Let F_1 be the force on Ring 1; F_2 be the force on Ring 2.

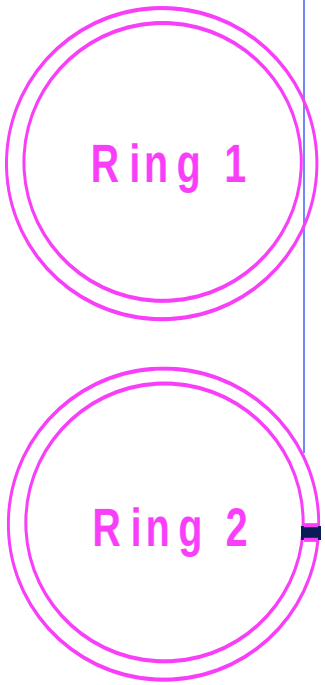

(a) $F_2 < F_1$ **(b) $F_2 = F_1$** **(c) $F_2 > F_1$**

- The emf's induced in each case are equal.
- The currents induced in the ring are NOT equal because of the different resistivities of the materials.
- The copper ring will have a larger current induced (smaller resistance) and therefore will experience a larger force (F proportional to current).

AC Generator

- Water turns wheel
  - → rotates magnet
  - → changes flux
  - → induces emf
  - → drives current

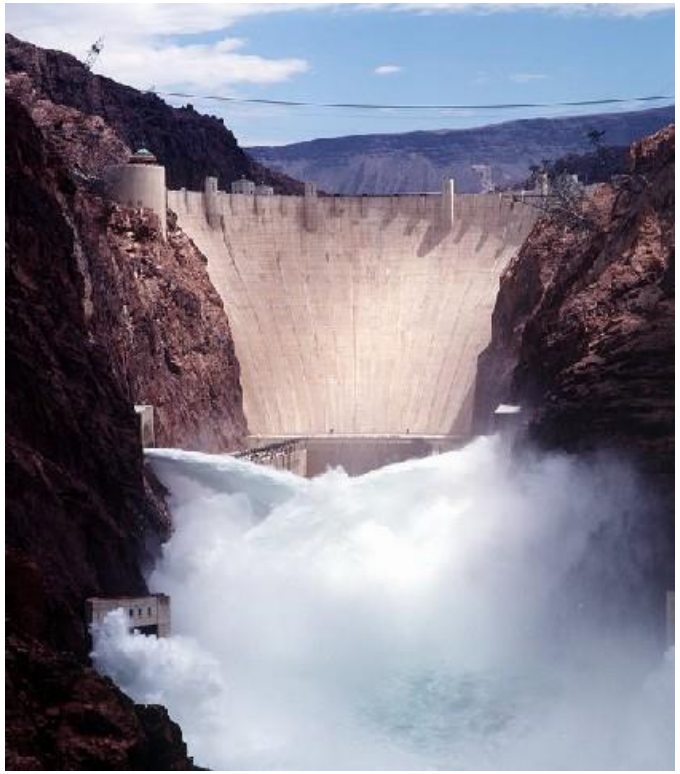

"Dynamic" Microphones

(E.g., some telephones)

- Sound
  - → oscillating pressure waves
  - → oscillating [diaphragm + coi
  - → oscillating magnetic flux
  - → oscillating induced emf
  - → oscillating current in wire

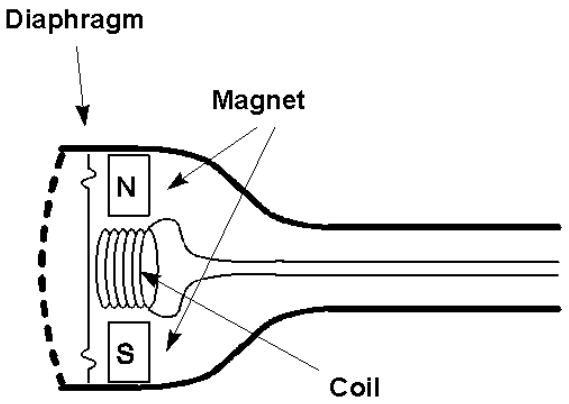

Induction

- Tape / Hard Drive / ZIP Readout
  - Tiny coil responds to change in flux as the magnetic domains (encoding 0's or 1's) go by.

Question: How can your VCR display an image while paused?



- Credit Card Reader
  - Must swipe card
    → generates changing flux
    - Faster swipe → bigger signal



Induction

Magnetic Levitation (Maglev) Trains

- Induced surface ("eddy") currents produce field in opposite direction
  - → Repels magnet
  - → Levitates train

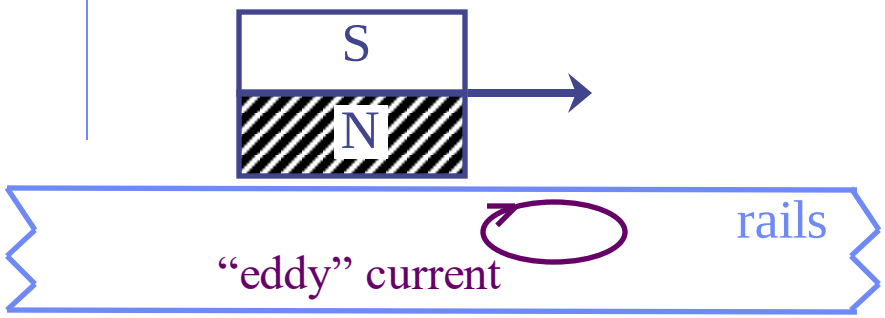



- Maglev trains today can travel up to 310 mph
  - → Twice the speed of Amtrak's fastest conventional train!
- May eventually use superconducting loops to produce B-field

Summary

- Faraday's Law (Lenz's Law)
  - a changing magnetic flux through a loop induces a current in that loop

$$\Phi_B \equiv \int \vec{B} \bullet d\vec{S}$$

$$\varepsilon = -\frac{d\Phi_B}{dt}$$

negative sign indicates that the induced EMF opposes the change in flux

- **Faraday's Law in terms of Electric Fields**

$$\oint \vec{E} \bullet d\vec{l} = -\frac{d\Phi_B}{dt}$$

$\Delta B/\Delta t \rightarrow E$

- Faraday's law $\Rightarrow$ a changing B induces an emf which can produce a current in a loop.
- In order for charges to move (i.e., the current) there must be an electric field.
- Thus, we can state Faraday's law more generally in terms of the E field which is produced by a changing B field.

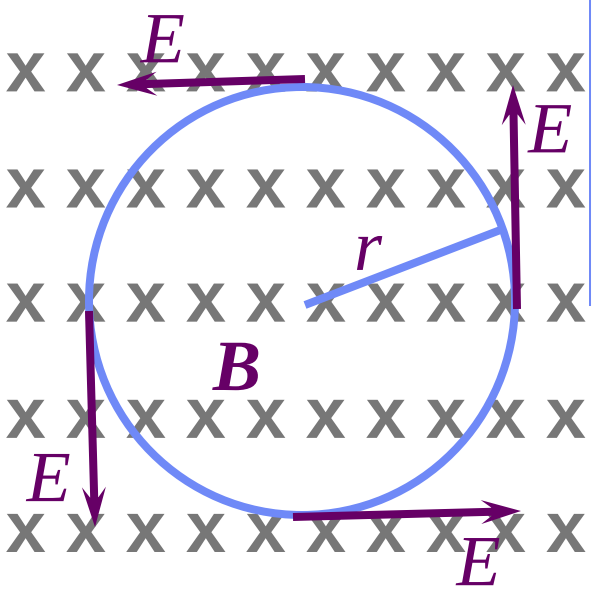

- **Suppose B is increasing into the screen as shown above. An E field is induced in the direction shown. To move a charge q around the circle would require an amount of work =**

$$W = \oint q\vec{E} \bullet d\vec{l}$$

- **This work can also be calculated from $\varepsilon = W/q$.**

$\Delta B/\Delta t \rightarrow E$

- **Putting these 2 eqns together:**

$$W = \oint q\vec{E} \bullet d\vec{l}$$

$$\varepsilon = \frac{W}{q} \quad \Rightarrow \quad \boxed{\varepsilon = \oint \vec{E} \bullet d\vec{l}}$$

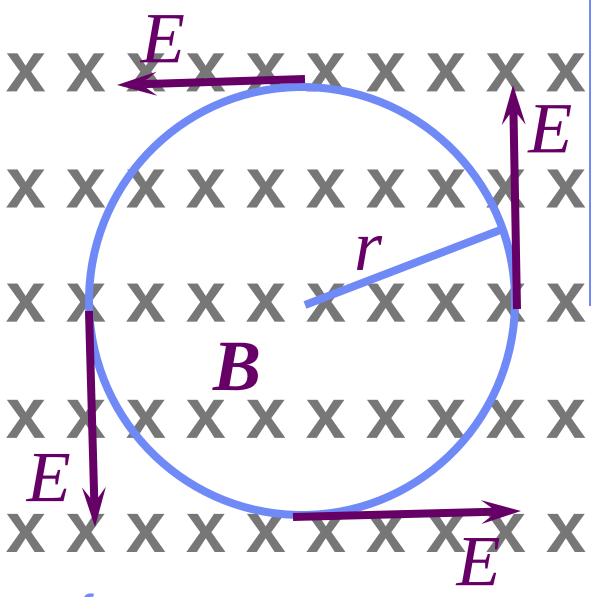

- **Therefore, Faraday's law can be rewritten in terms of the fields as:**

Line integral around loop

$$\oint \vec{E} \bullet d\vec{l} = -\frac{d\Phi_B}{dt}$$

Rate of change of flux through loop

- Note: In Lect. 5 we claimed $\oint \vec{E} \bullet d\vec{l} = 0$, so we could define a potential independent of path. This holds only for charges at rest (electro*statics*). Forces from changing magnetic fields are *nonconservative*, and no potential can be defined!

Escher depiction of nonconservative *emf*

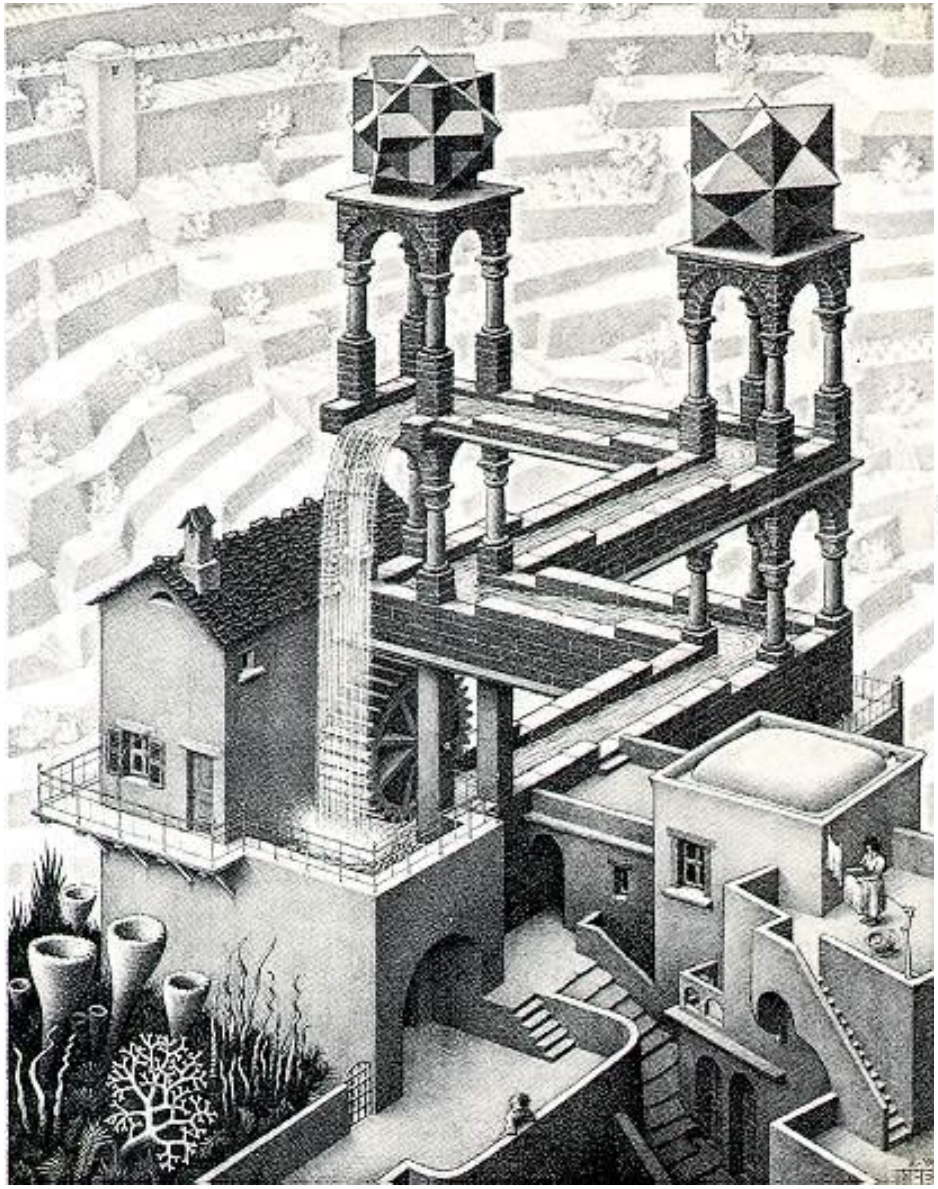

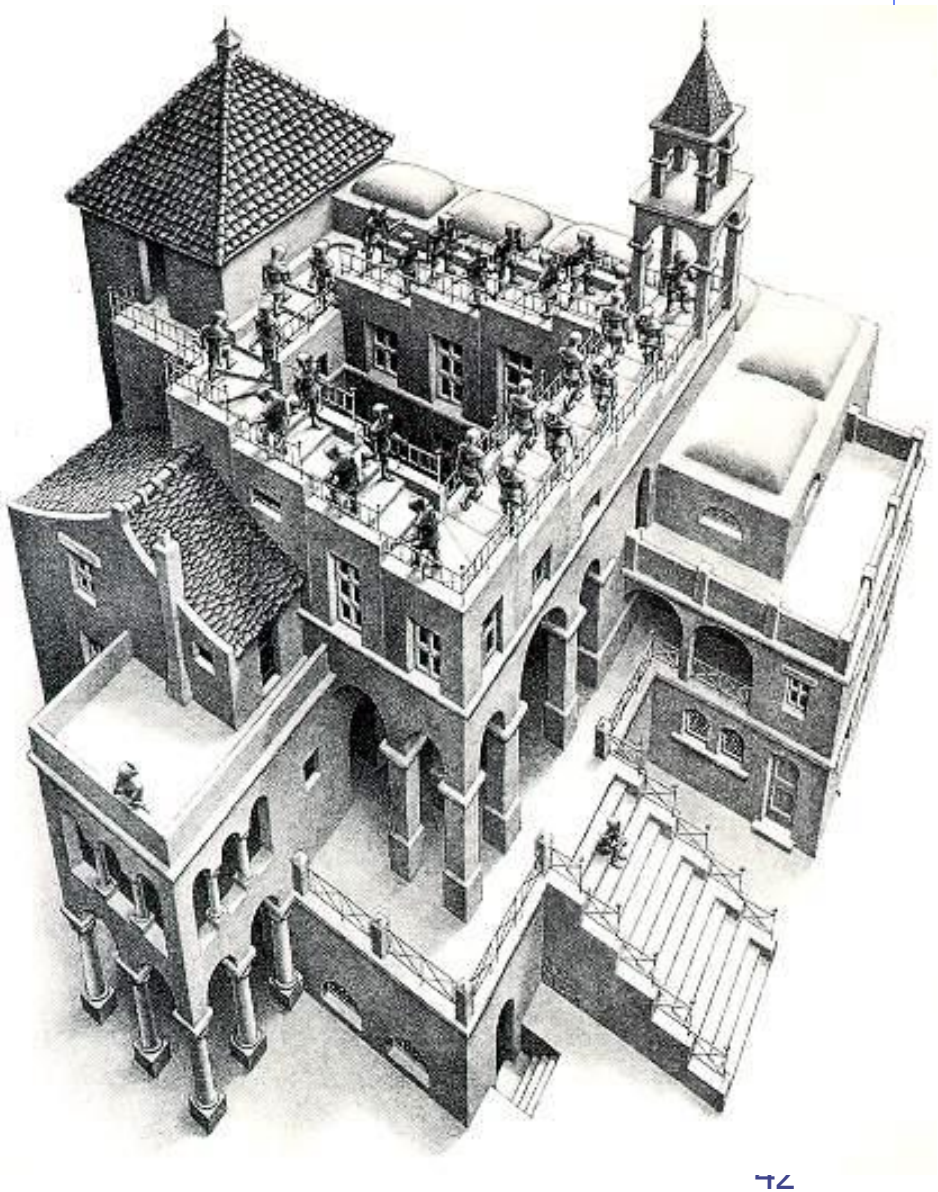

Preflight 16:

Buzz Tesla claims he can make an electric generator for the cost of one penny. "Yeah right!" his friends exclaim. Buzz takes a penny out of his pocket, sets the coin on its side, and flicks it causing the coin to spin across the table. Buzz claims there is electric current inside the coin, because the flux through the coin from the Earth's magnetic field is changing.



10) Is Buzz telling the truth?

a) yes

b) no

Physical Components versus Circuit Elements

Circuit elements are circuit models which have simple but precise characterizations

In reality the physical components such as real resistors, diodes, coils and condensers can only be approximated with the circuit models.

We have to understand under what conditions the model is valid, and more importantly, under what situation the model needs to be modified.

There three principle considerations that are of importance in modeling physical components

Range of operation

Any physical component is specified in terms of its normal range of operation. Typically the maximum voltage, the maximum current and the maximum power are almost always specified for any device.

Another specified range of operation is the range of frequencies.

Example

At very high frequencies a physical resistor cannot be modeled only as a resistor.

Whenever there is a voltage difference, there is an electric field, hence some electrostatic energy is stored. The presence of current implies that some magnetic energy is stored. At low frequencies such effects are negligible, and hence a physical resistor can be modeled as a single circuit element, a resistor.

However, at high frequencies a more accurate model will include some capacitive and inductive elements in addition to the resistor.

Temperature effect

Resistors, diodes and almost all circuit components are temperature sensitive. Circuits made up of semiconductors often contain additional schemes, such as feedback which counteract the changes due to temperature variation

Parasitic Effect

One the most noticeable phenomenon in a physical inductor in addition to its magnetic field when current passes through, its dissipation. The wiring of a physical inductor has a resistance that may have substantial effects in some circuits. Thus, in modeling a physical inductor we often use a series connection of an inductor and resistor.

Summary

- Circuit elements are ideal models that are used to analyze and design circuits. Physical components can be approximately modeled by circuit elements.
- Each two-terminal element is defined by a characteristic, that is by a curve drawn in an appropriate plan. Each element can be subjected to a four-way classification according to its linearity and its time invariance.
- A resistor is characterized, for each t, by a curve in the iv (or vi) plane.

Lecture 5

- **Simple Circuits**.
- Series connection of resistors.
- Parallel connection of resistors.
- Series and Parallel connection of resistors.
- Small signal analysis.
- Circuits with capacitors and inductors.
- Series connection of capacitors.
- Parallel connection capacitors
- Series connection of inductors.
- Parallel connection inductors.

Series Connection of Resistors

Here's How Resistors Add in Series

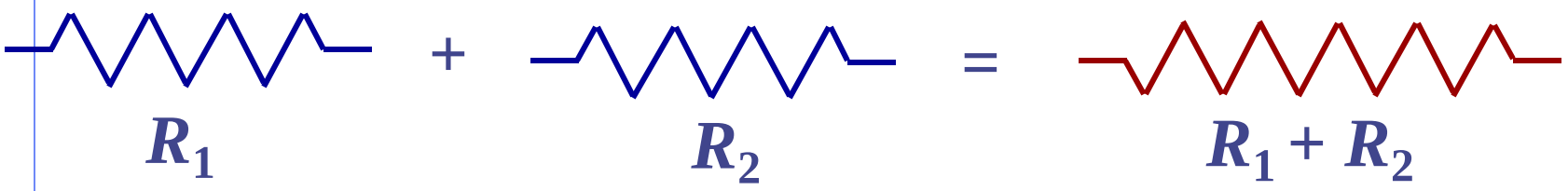

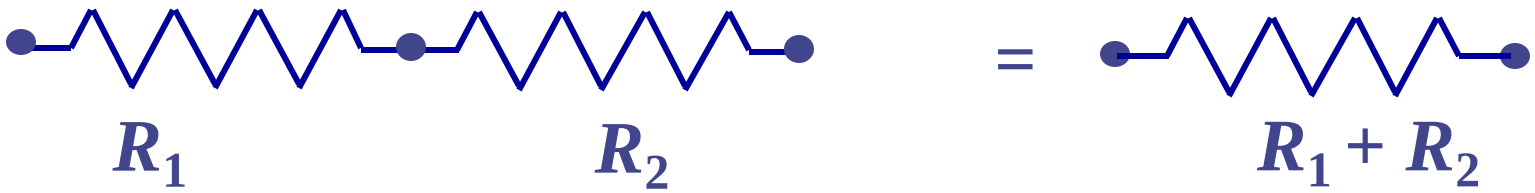

Equivalent Resistance

Easy to prove: Put together two resistors end-to-end

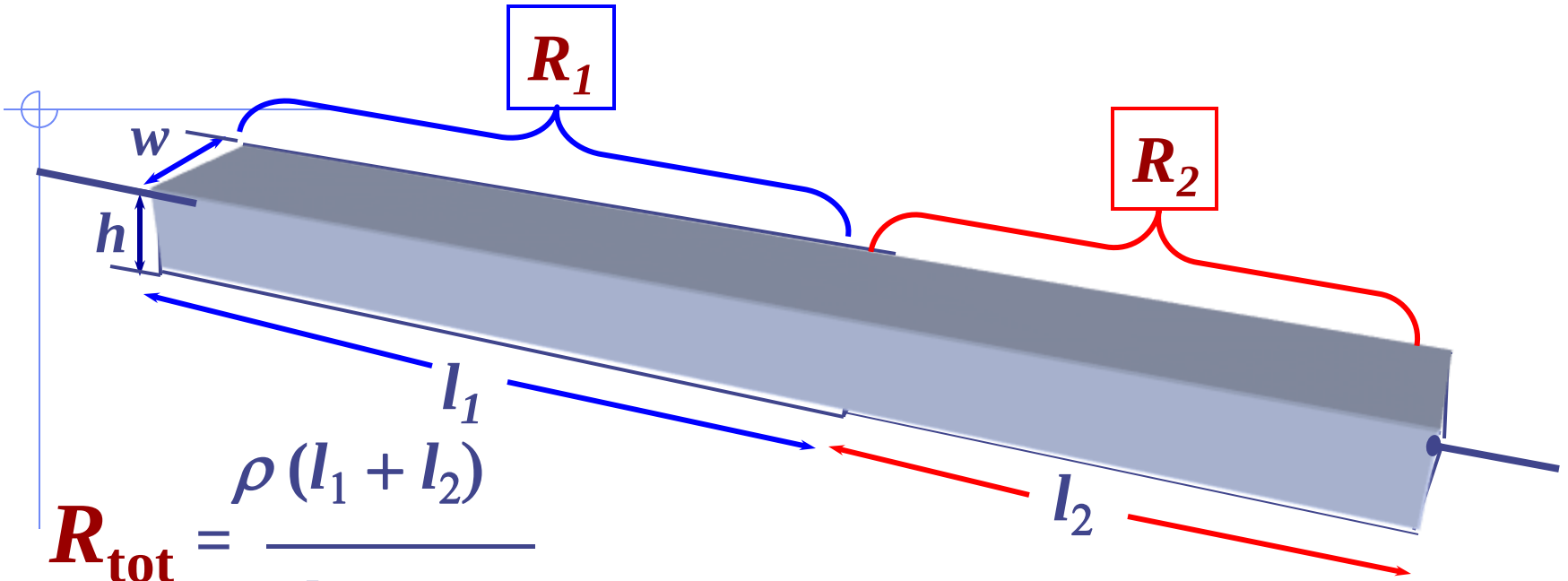

$$R_{tot} = \frac{\rho\,(l_1 + l_2)}{hw}$$

Can also be written as…

Resistors *add* in "series"

$$R_{tot} = \frac{\rho\, l_1}{hw} + \frac{\rho\, l_2}{hw} = R_1 + R_2$$

Example 1

Let us consider the circuit in Fig. 5.1, where two nonlinear resistors $\mathcal{R}_1$ and $\mathcal{R}_2$ are connected at node B. Nodes A and C are connected to the rest of the circuit, which is designed by $\mathcal{P}$. The one-port, consisting of resistor $\mathcal{R}_1$ and $\mathcal{R}_2$, whose terminals are nodes A and C, is called the series connection of resistors $\mathcal{R}_1$ and $\mathcal{R}_2$.

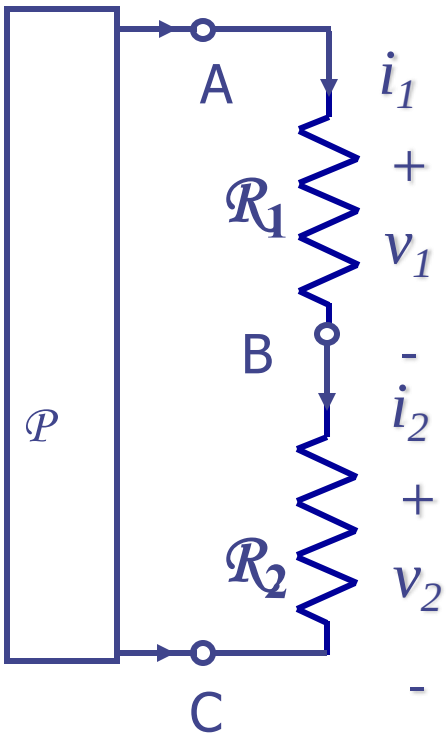

Fig. 5.1 The series connection of $\mathcal{R}_1$ and $\mathcal{R}_2$

The two resistors $\mathcal{R}_1$ and $\mathcal{R}_2$ are specified by their characteristics, as shown in the *vi* plane in Fig.1.2. We wish to determine the characteristic of the series connection of $\mathcal{R}_1$ and $\mathcal{R}_2$ that is the characteristic of a resistor equivalent to the series connection.

First KVL for the mesh ABCA requires that

$$v = v_1 + v_2 \tag{5.1}$$

Next KCL for the nodes A,B, and C requires that

$$i = i_1 \qquad i_1 = i_2 \qquad i_2 = i$$

Clearly, one of the above three equations is redundant; they may be summarized by

$$i_1 = i_2 = i \qquad (5.2)$$

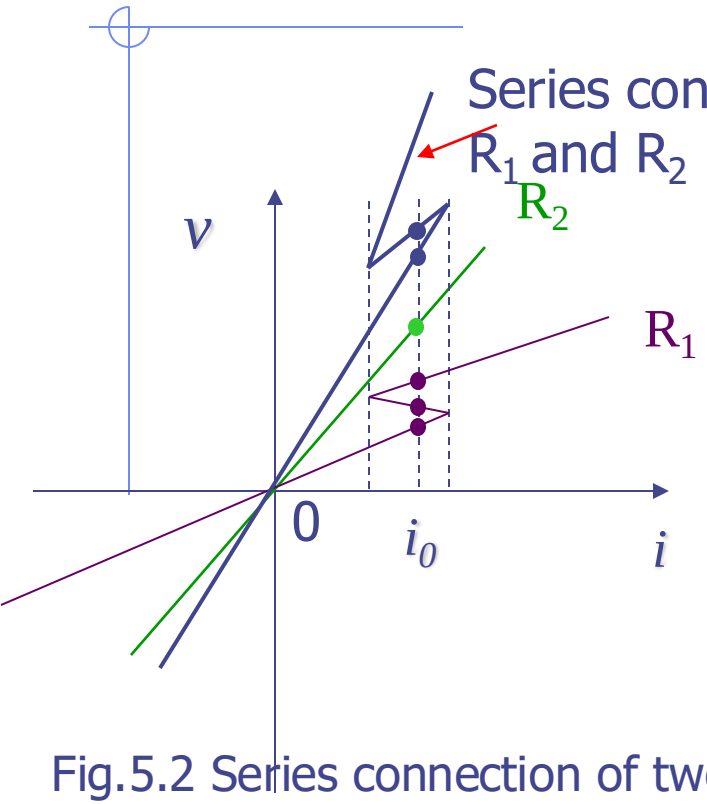

Fig.5.2 Series connection of two resistors $\mathcal{R}_1$ and $\mathcal{R}_2$

Thus, Kirchohoffs laws state that $\mathcal{R}_1$ and $\mathcal{R}_2$ are traversed by the same current, and the voltage across the series connection is the sum of the voltage across $\mathcal{R}_1$ and $\mathcal{R}_2$.

Thus,the characteristic of the series connection is easily obtained graphically; for each fixed i we add the values of the voltages allowed by the characteristics of $\mathcal{R}_1$ and $\mathcal{R}_2$

In this example $\mathcal{R}_2$ is a linear resistor, and $\mathcal{R}_1$ is a voltage controlled nonlinear resistor; I.e. the current in $\mathcal{R}_1$ is specified by a function of the voltage.

In Fig.5.2 it is seen that if the current is I , the characteristic $\mathcal{R}_1$ allows three possible values for the voltage; hence, $\mathcal{R}_1$ is not current-controlled.

Analytically we can determine the characteristic of the resistor that is equivalent to the series connection of two resistors $\mathcal{R}_1$ and $\mathcal{R}_2$ only if both are current-controlled.

Current controlled resistors $\mathcal{R}_1$ and $\mathcal{R}_2$ have that may be described by equations of the form

$$v_1 = f_1(i_1) \qquad v_2 = f_2(i_2) \tag{5.3}$$

where the reference directions are shown in Fig.1.1. In view of Eqs (5.1) and (5.2) the series connection has a characteristic given by

$$v = f_1(i_1) + f_2(i_2) = f_1(i) + f_2(i) \tag{5.4}$$

Therefore we conclude that the two-terminal circuit as characterized by the voltage relation Eq.(5.4) is another resistor specified by

$$v = f(i) \tag{5.5a}$$

where

$$f(i) = f_1(i) + f_2(i) \qquad \text{for all} \quad i \tag{5.5b}$$

Equations (5.5a) and (5.5b) show that the series connection of the two current controlled resistors is equivalent to a current-controlled resistor $\mathcal{R}$, and its characteritic is described by the function f(·) defined in (5.5b) (see fig.5.3).

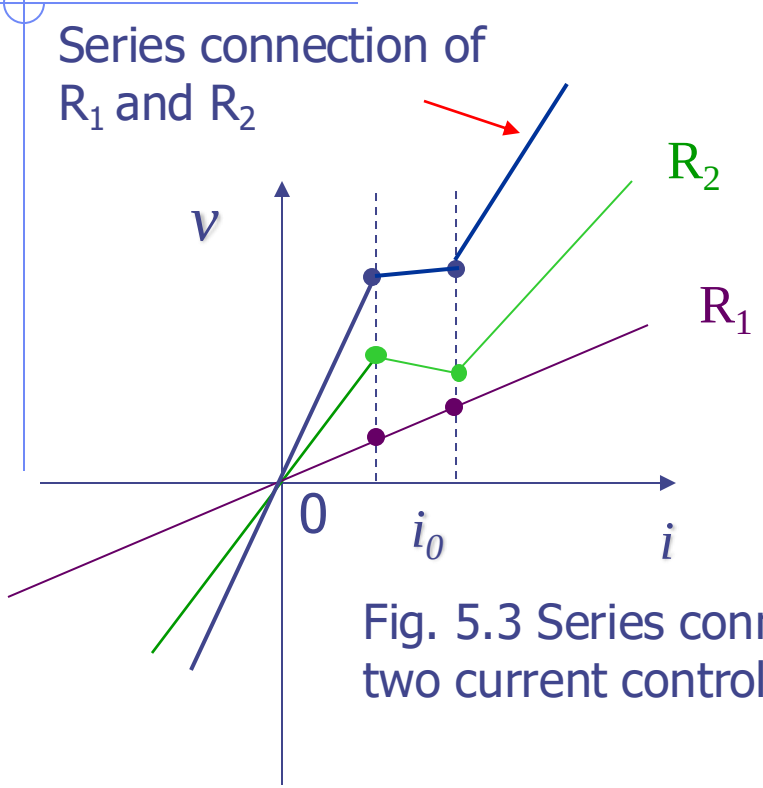

Fig. 5.3 Series connection of two current controlled resistors

Using analogous reasoning, we can state that the series connection of m current controlled resistors with characteristic described by $v_k=f_k(i_k),\ k=1,2,\ldots,m$ is equivalent to a single current controlled resistor whose characteristic is described by $v=f(i)$, where

$$f(i)=\sum_{k=1}^{m} f_k(i) \qquad \text{for all} \quad i$$

If, in particular, all resistors are linear; that is $v_k=f_k(i_k),\ k=1,2,\ldots,m$, the equivalent resistor is also linear, and $v=Ri$, where

$$R=\sum_{k=1}^{m} R_k \qquad (5.6)$$

Example 2

Consider a circuit in Fig.5.4 where m voltage sources are connected in series. Clearly, this is only a special case of the series connection of m current controlled resistors.

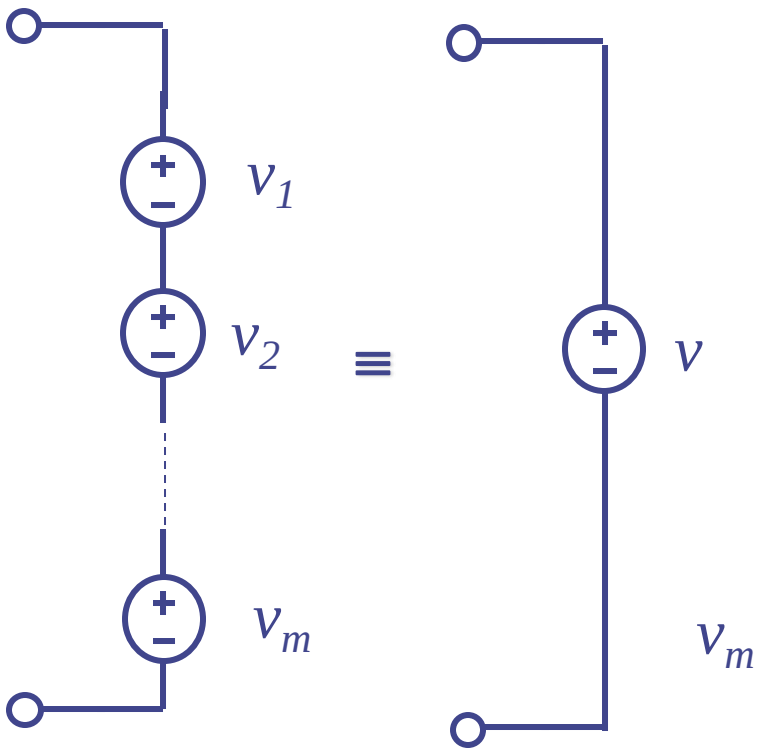

Extending Eq.(5.1), we see that the series combination of m voltage sources is equivalent to a single voltage source whose terminal voltage is v,

$$v = \sum_{k=1}^{m} v_k \qquad (5.7)$$

Fig. 5.4 Series connection of voltage sources.

Example 3

Consider the series connection of m current sources as shown in Fig.5.5. Such a connection usually violets KCL;indeed, KCL applied to nodes B and C requires $i_1=i_2=i_3=\ldots$

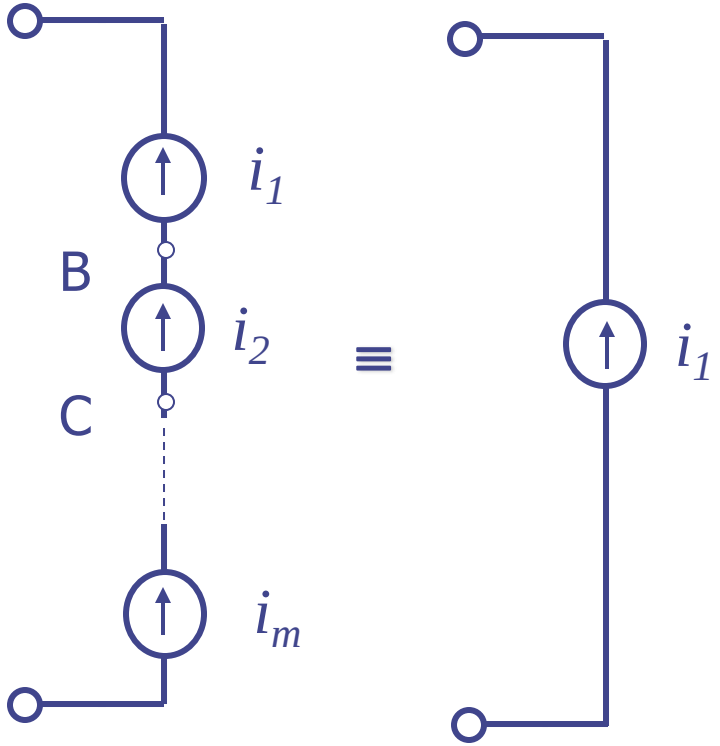

Fig 5.5. Series connection of current sources can be made only if $i_1=i_2=\ldots=i_m$

Therefore, it does not make sense physically to consider the series connection of current sources unless this connection is satisfied. Then series connection of m identical current sources is equivalent to one such current source.

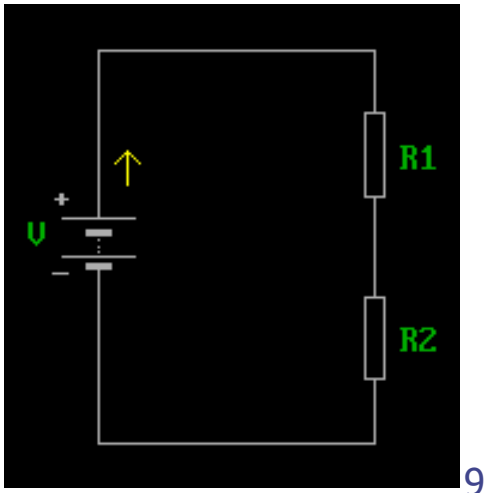

Example 4

Consider the series connection of a linear resistor R_1 and a voltage source v_2, as shown in Fig 5.6a

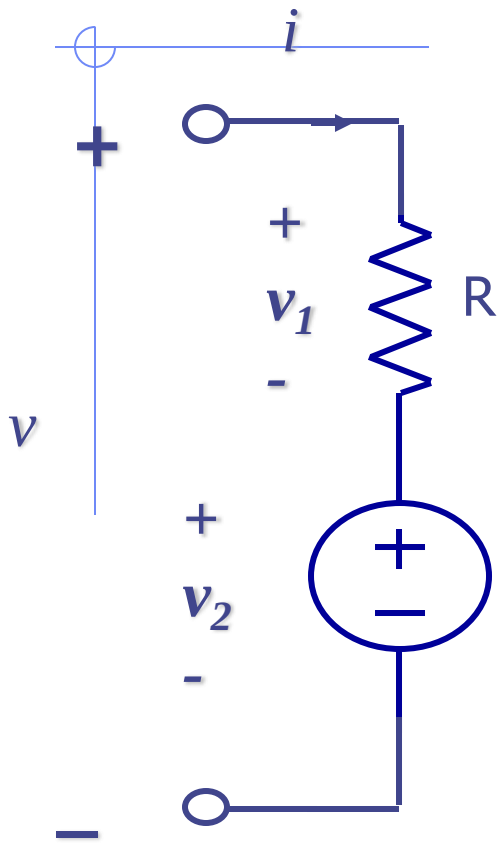

(a)

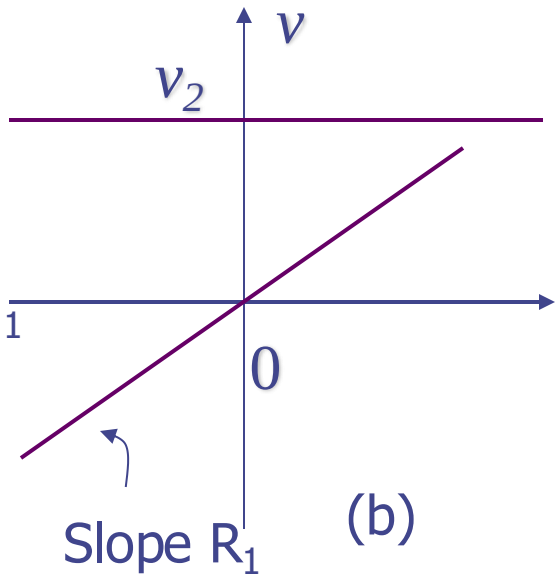

(b)

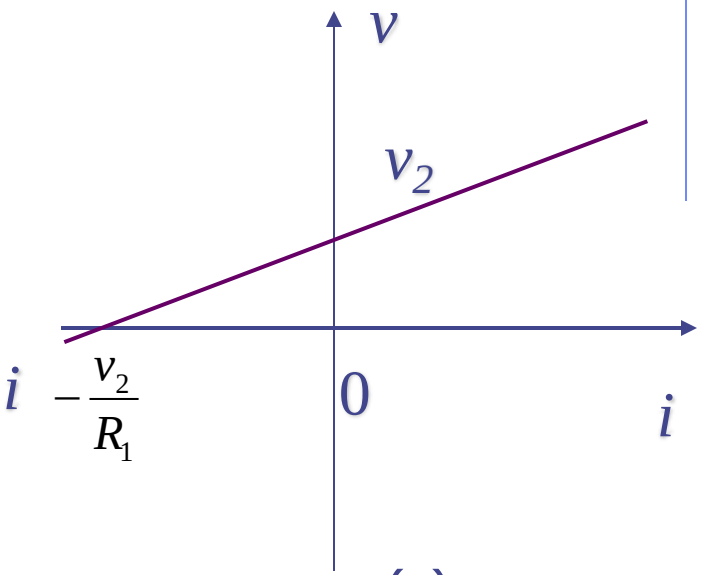

(c)

Fig. 5.6 Series connection of a linear resistor and a voltage source.

Their characteristics are plotted on the same *iv* plane and are shown in Fig. 5.6b. The series connection has a characteristic as shown in Fig.5.c. in terms of functional characterization we have

$$v = v_1 + v_2 = R_1 i + v_2 \qquad (5.8)$$

Sine R_1 is a known constant and v_2 known, Eq.(5.8) relates all possible values of v and i. It is equation of a straight line as shown in Fig. 5.6c.

Example 5

Consider the circuit of Fig.5.7a where a linear resistor is connected to an ideal diode. Their characteristics are plotted on the same graph and are shown in Fig.5.7b. The series connection has a characteristic as shown Fig.5.7c. The series connection has a characteristic as shown in Fig. 5.7c it is obtained by reasoning as follows.

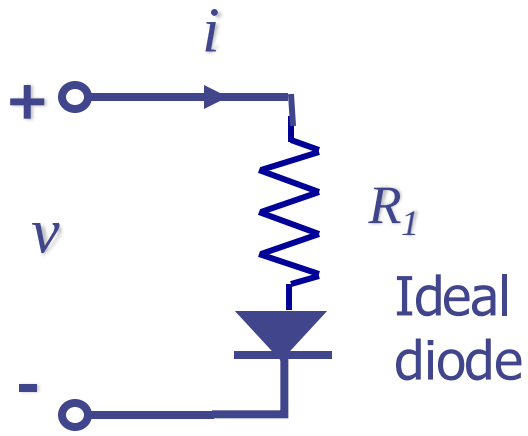

(a)

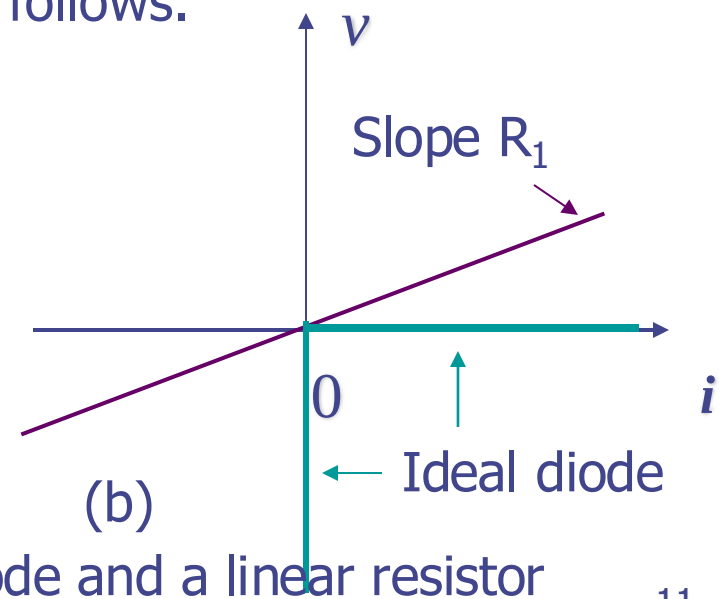

(b)

Fig.5.7 Series connection of an ideal diode and a linear resistor

First for the positive current we can simply add the ordinates of the two curves. Next, for negative voltage across the ideal diode is an open circuit; Hence the series connection is again an open circuit. The current *i* cannot be negative

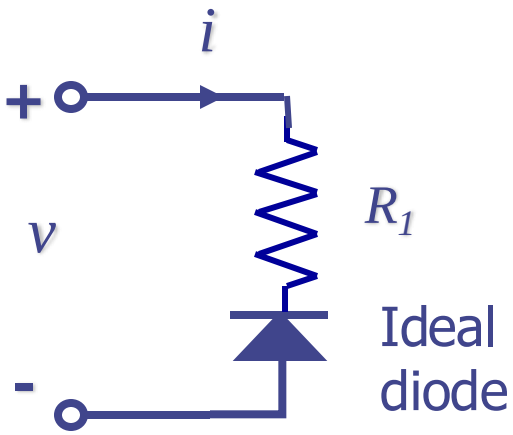

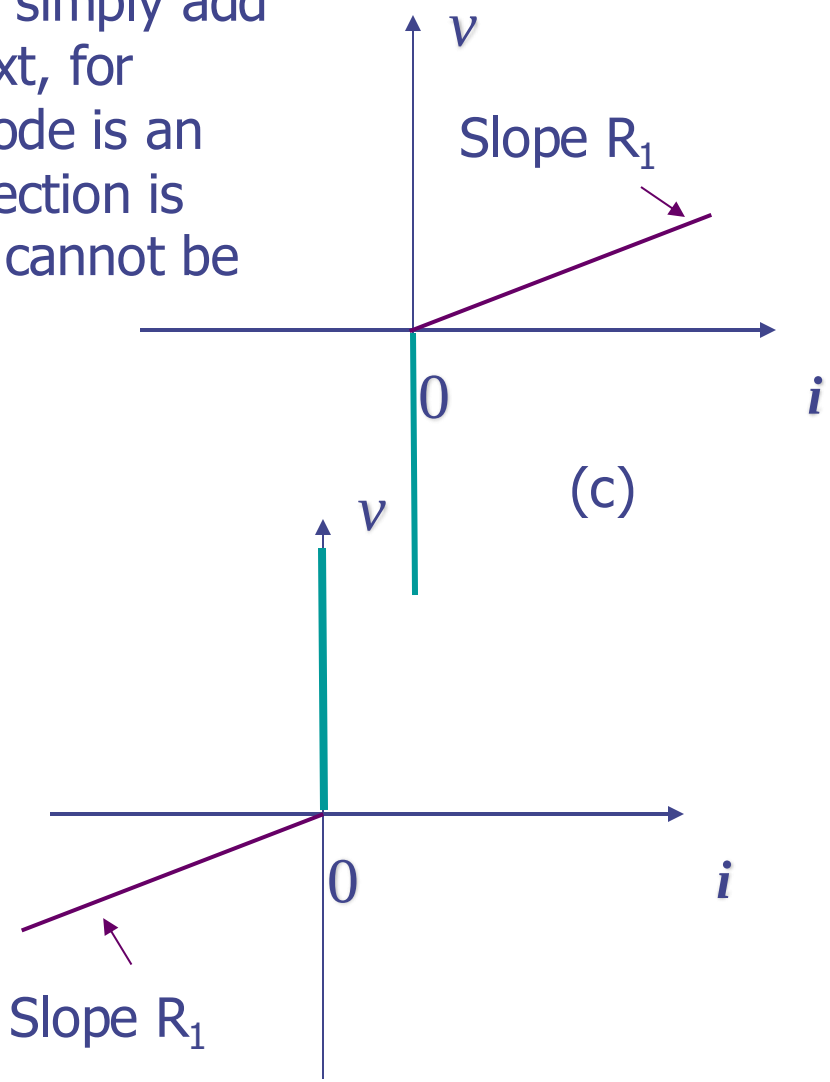

Fig..5.8The series connection is analogous to that of Fig.5.7 except that the diode is reversed

Let us assume that a voltage source is connected to the one-port of Fig 5.7a and that is has a sinusoidal waveform

(5.9) $$v_s(t) = A\cos(\omega_0 t + \phi)$$

As shown in Fig. 5.9a.

The current i passing through the series connection is a periodic function of time as shown in fig 5.9b

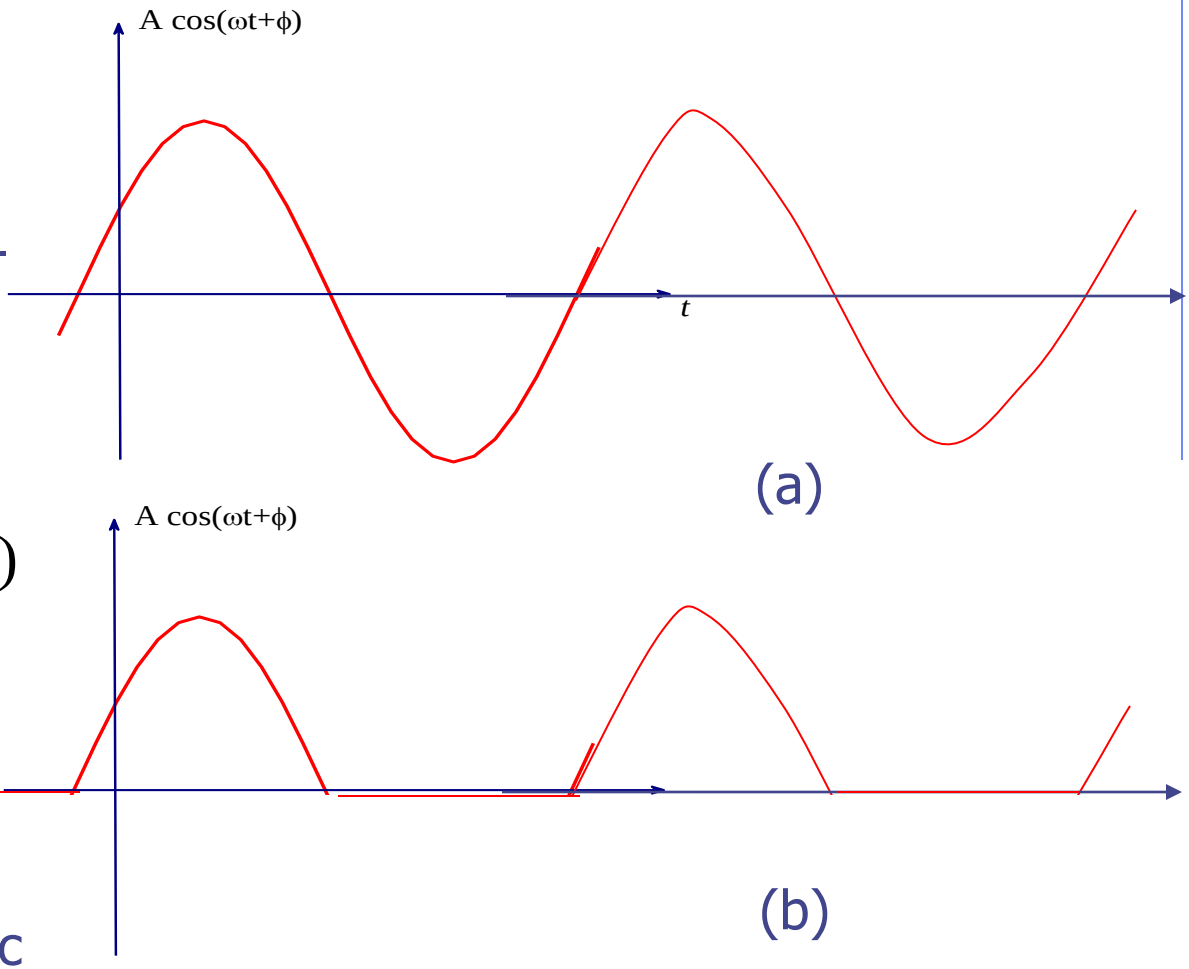

Fig.5.9 For an applied voltage shown in (a) the resulting current is shown in (b) for the circuit Fig 5.7a

Observe that the applied voltage $v(\cdot)$ is a periodic function of time with zero average value. The current $i(\cdot)$ is also a periodic function of time with the same period, but it is always nonnegative. By use of filters it is possible to make this current almost constant; hence a *sinusoidal signal* can be converted into a *dc signal.*

Summary

For the series connection of elements, KCL forces the currents in all elements (branches) to be the same, and KVL requires that the voltage across the series connection be the sum of the voltages of all the brunches.

Thus, if all the nonlinear resistors are current controlled, the equivalent resistor of the series connection has a characteristic $v=f(i)$ which is obtained by adding the individual functions $f_k(\cdot)$ which characterize the individual current-controlled resistors.

For linear resistors the sum of individual resistance gives the resistance of the equivalent resistor, i.e., for m linear resistors in series.

$$R = \sum_{k=1}^{m} R_k$$

Parallel Connection of Resistors

Here's How Resistors Combine in Parallel

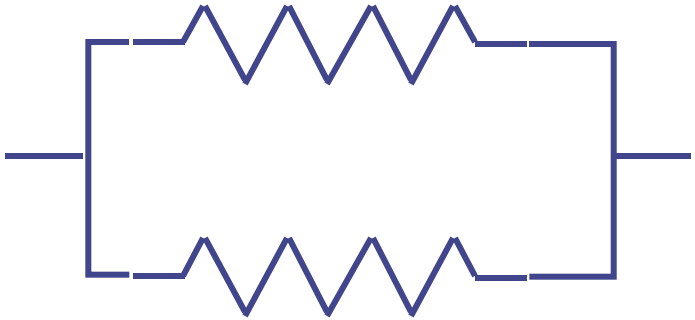

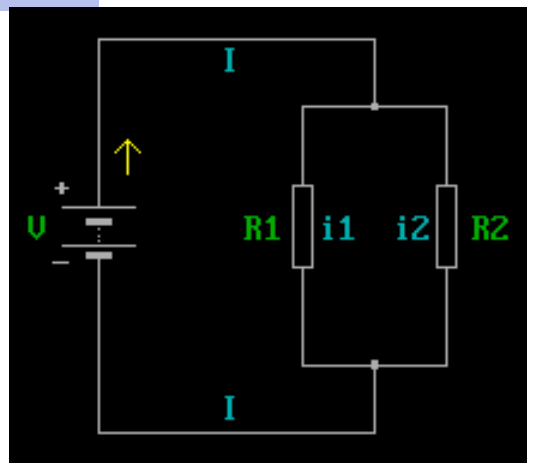

Express them as Conductances $G = \frac{1}{R}$

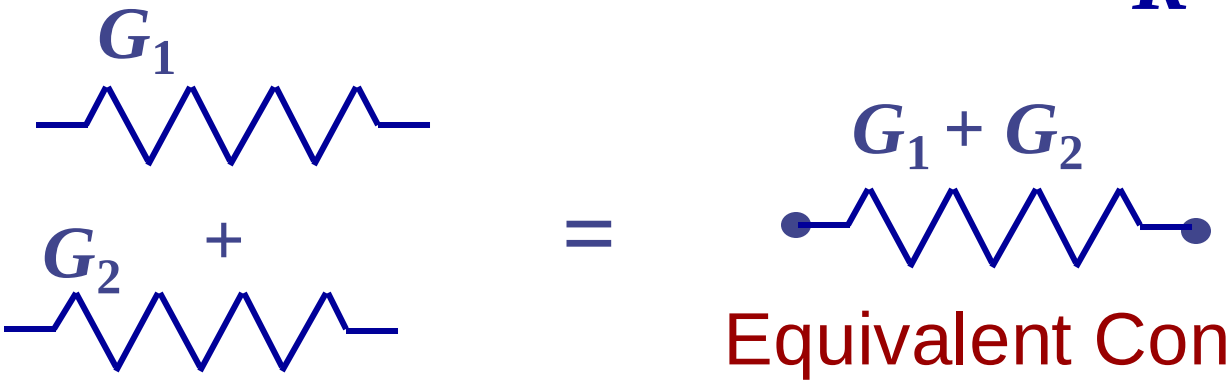

Equivalent Conductance

Parallel Resistance Formula

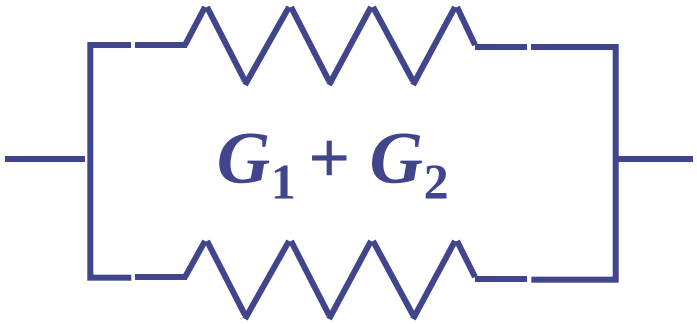

$$G_1 + G_2 = \frac{1}{R_1} + \frac{1}{R_2}$$

$$R_{eq} = \frac{1}{G_1 + G_2} = \frac{1}{\frac{1}{R_1} + \frac{1}{R_2}} = \frac{R_1 R_2}{R_1 + R_2}$$

Shorthand Notation: $R_1 \| R_2$

Easy to prove: Put together two resistors side by side

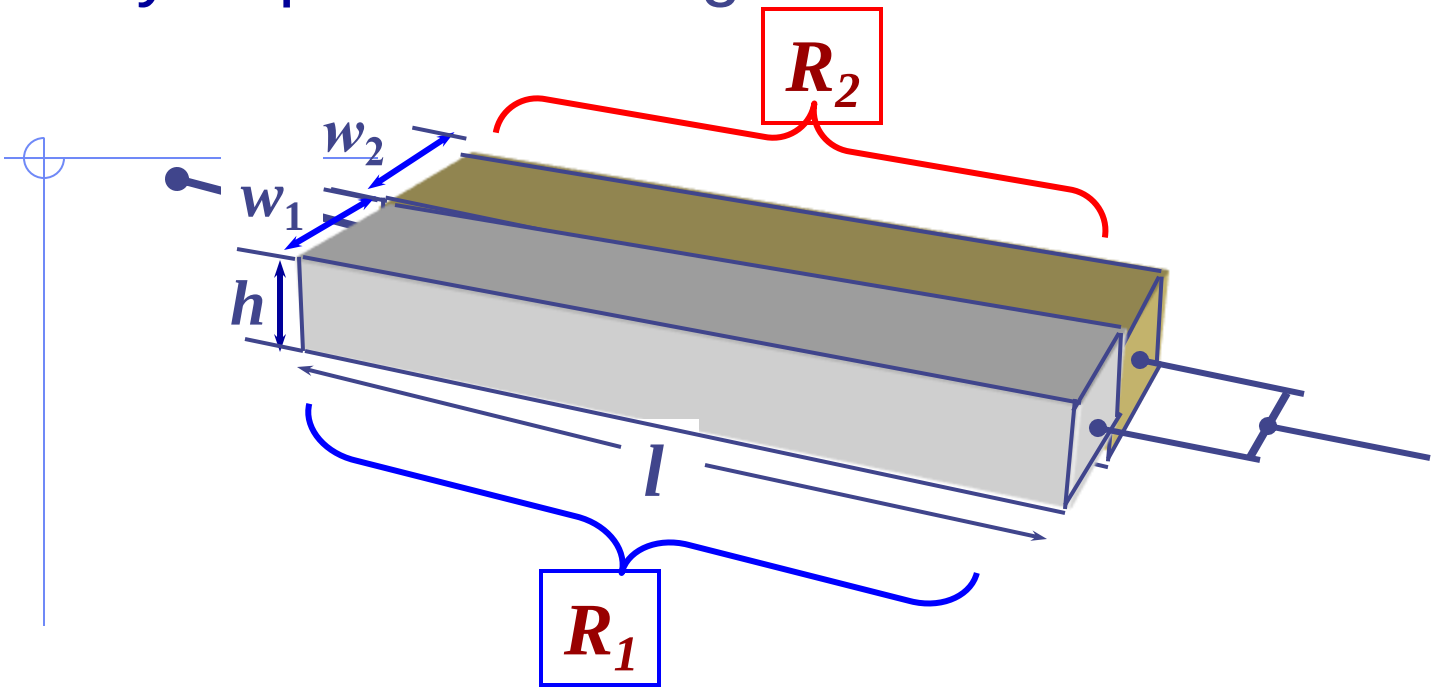

For the entire bar:

$$R_{eq} = \frac{\rho\, l}{h(w_1 + w_2)}$$

Total width

$$R_{eq} = \frac{\rho l}{h(w_1 + w_2)}$$

Multiply **num.** and **den.** by $\dfrac{\rho l}{(h\, w_1)(h\, w_2)}$

Equation becomes…

$$R_{eq} = \frac{(\rho l)\,[(\rho l)/\,(h\, w_1)(h\, w_2)]}{h(w_1 + w_2)\,[(\rho l)/\,(h\, w_1)(h\, w_2)]}$$

R_{eq} = Resistors *combine* in "parallel"

$$\frac{[(\rho l)/\,(h\, w_1)]\,[(\rho l)/\,(h\, w_2)]}{[\rho l/h\, w_1] + [\rho l/\, h\, w_2]} = \frac{R_1 R_2}{R_1 + R_2}$$

Three or More Resistors in Parallel

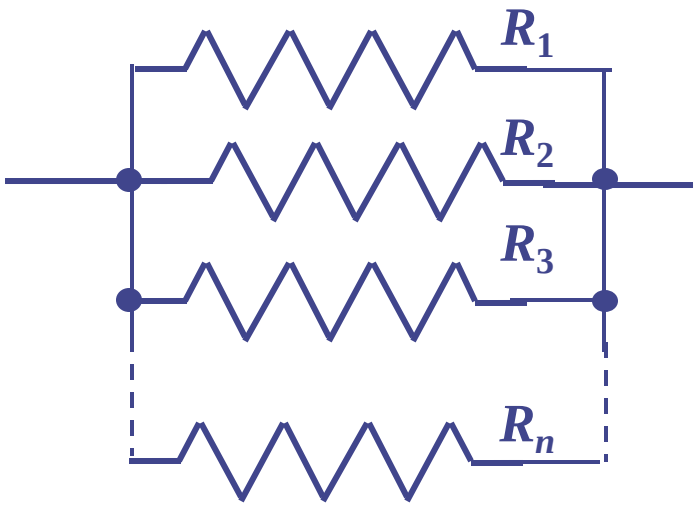

For ***n*** resistors:

$$R_{eq} = \left(\frac{1}{R_1} + \frac{1}{R_2} + \frac{1}{R_3} + \ldots + \frac{1}{R_n} \right)^{-1}$$

Let us consider the circuit in Fig.5.10 where two resistors $\mathcal{R}_1$ and $\mathcal{R}_2$ are connected in parallel at nodes A and B. Nodes A and B are also connected to the rest of circuit designated by $\mathcal{P}$. Let the two resistors be specified by their characteristics, which are shown in Fig.5.11 where they are plotted on the *vi* plane.

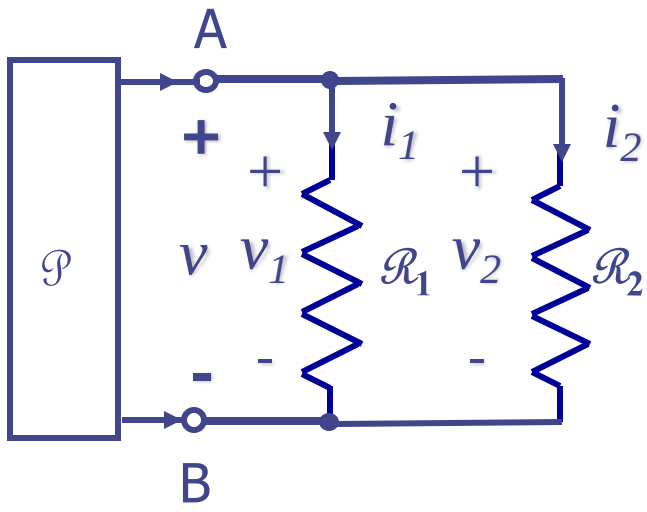

Fig.5.10 Parallel connection of two resistors

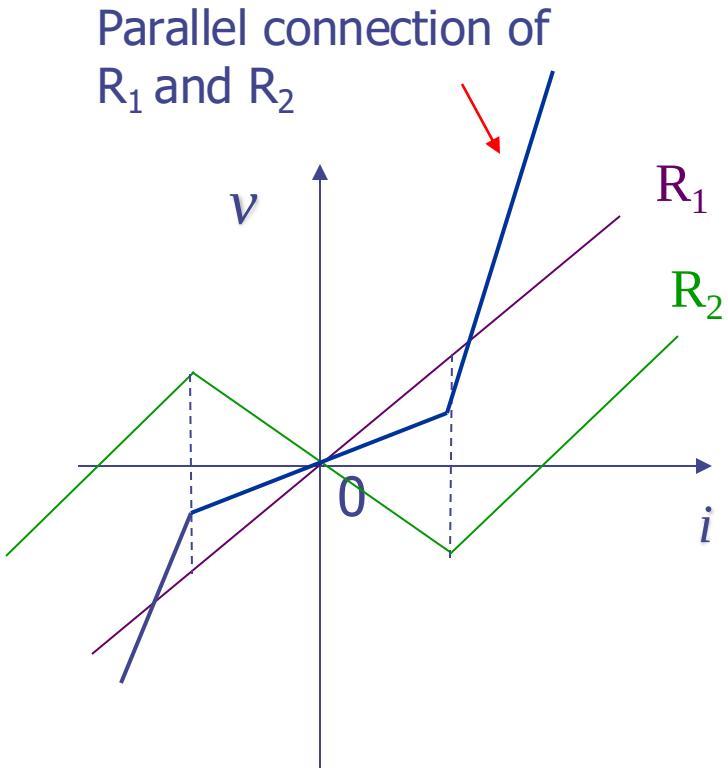

Fig.5.11 Characteristics of $\mathcal{R}_1$ and $\mathcal{R}_2$ and their parallel connection

Let us find the characteristic of the parallel connection of $\mathcal{R}_1$ and $\mathcal{R}_2$. Thus, Kirchhhofç laws imply that $\mathcal{R}_1$ and $\mathcal{R}_2$ have the same branch voltage, and the current through the parallel connection is the sum of the currents through each resistor. The characteristic of the parallel connection is thus obtained by adding, for each fixed v, the values of the current allowed by the characteristic of $\mathcal{R}_1$ and $\mathcal{R}_2$. The characteristic obtained in Fig. 5.11 is that of the resistor equivalent to the parallel connection.

Analytically, if $\mathcal{R}_1$ and $\mathcal{R}_2$ are voltage controlled, their characteristics may be described by equation of the form

$$i_1 = g_1(v_1) \qquad i_2 = g_2(v_2) \tag{5.10}$$

and in view of Kirchoff's laws, the parallel connection has a characteristic described by

$$i = i_1 + i_2 = g_1(v_1) + g_2(v_2) \tag{5.11}$$

In other words the parallel connection is described by the function $g(\cdot)$, defined by

$$i = g(v) \tag{5.12a}$$

where

$$g(v) = g_1(v_1) + g_2(v_2) \quad \text{for all } v \tag{5.12b}$$

Extending this result to the general case, we can state that the parallel connection of *m* voltage controlled resistors with characteristic described by $i_k = g_k(v_k),\ k = 1,2,\ldots,m$ is equivalent to a single voltage-controlled resistor whose characteristic $i = g(v)$, where

$g(v) = \sum_{k=1}^{m} g_k(v)$ for all v If, in particular, all resistors are linear, that is

$i_k = G_k v_k, k = 1,2,\ldots,m$ the equivalent resistor is also linear, and

$i = Gv$, where

$$G = \sum_{k=1}^{m} G_k \tag{5.13}$$

G is the conductance of the equivalent resistor.

In terms of resistance value

$$R = \frac{1}{G} = \frac{1}{\sum_{k=1}^{m} G_k}$$

or

$$R = \sum_{k=1}^{m} \frac{1}{R_k} \qquad (5.14)$$

Example 1

As shown in Fig.5.12, the parallel connection of m current sources is equivalent to a single current source

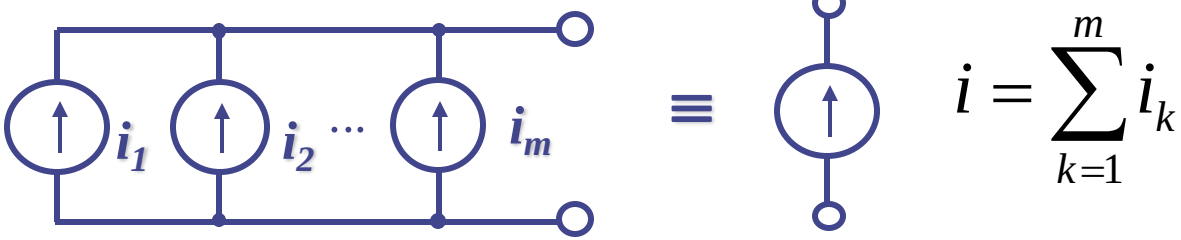

$$i = \sum_{k=1}^{m} i_k$$

Fig. 5.12 Parallel connection of current sources

Example 2

The parallel connection of voltage sources violates KVL with exception of the trivial case where all voltage sources are equal.

Example 3

The parallel connection of a current sources i_1 and linear resistor with resistance R_2 as shown in Fig. 5.13 a can be represented by the equivalent resistor that is characterized by

$$i = -i_1 + \frac{1}{R_2} v \qquad (5.15)$$

Eq.(2.7) can be written as

$$v = i_1 R_2 + i R_2 \qquad (5.16)$$

The alternative equivalent circuit can be drawn by interpreting the voltage v as the sum of two terms, a voltage source $v_1 = i_1 R_2$ and a linear resistor R_2 as shown in Fig. 5.13b

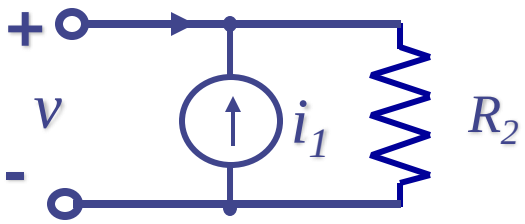

(a)

≡

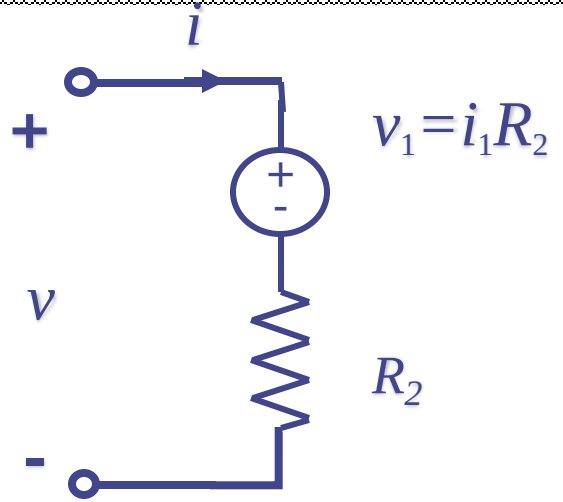

(b)

Fig.5.13 Equivalent one-ports illustrating a simple case of the Thevenin and Norton equivalent circuit theorem

Example 4

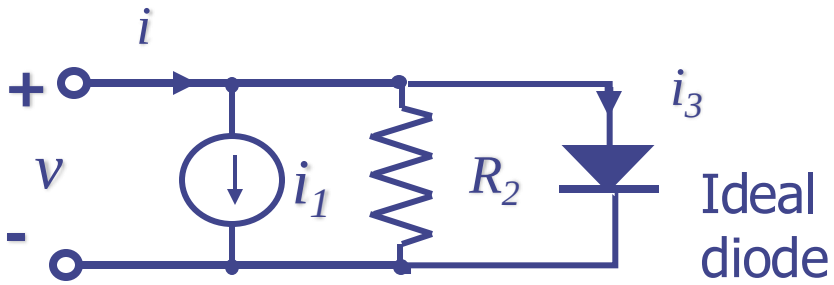

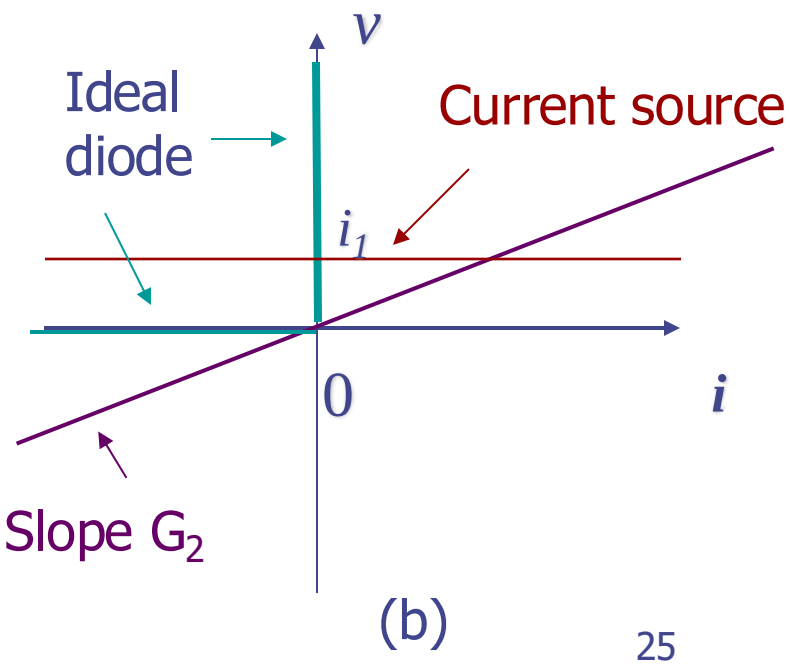

(b)

Fig.5.14 Parallel connection of a current source, a linear resistor, and an ideal diode.

The parallel connection of a current source, a linear resistor, and an ideal diode is shown in Fig. 5.14.a. Their characteristics re shown in Fig. 5.14b. The equivalent resistor has the characteristic shown in Fig 5.14c. For v negative the characteristic of the equivalent resistor is obtained by the addition of the thee curves.

For i_3 positive the ideal diode is a short circuit; thus the voltage v across it is always zero.

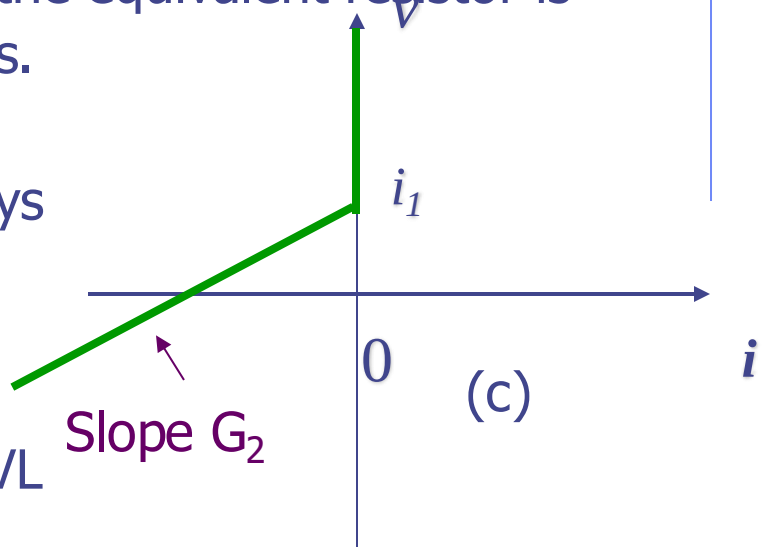

Summary

For the parallel connection of elements, KVL requires that all the voltages across the elements be the same, and KCL requires that the currents through the parallel connection be the sum of the currents in all the brunches.

For nonlinear voltage-controlled resistors, the equivalent resistor of the parallel connection has a characteristic $i=g(v)$ which is obtained by adding the individual functions $g_k(\cdot)$ which characterize each individual voltage-controlled resistor. For linear resistors the sum of individual conductances gives the conductance the equivalent resistor.

Series and Parallel Connection of Resistors

Example 1

Let us consider the circuit in Fig. 5.15, where a resistor $\mathcal{R}_1$ is connected in series with the parallel connection of with the parallel connection of $\mathcal{R}_2$ and $\mathcal{R}_3$.

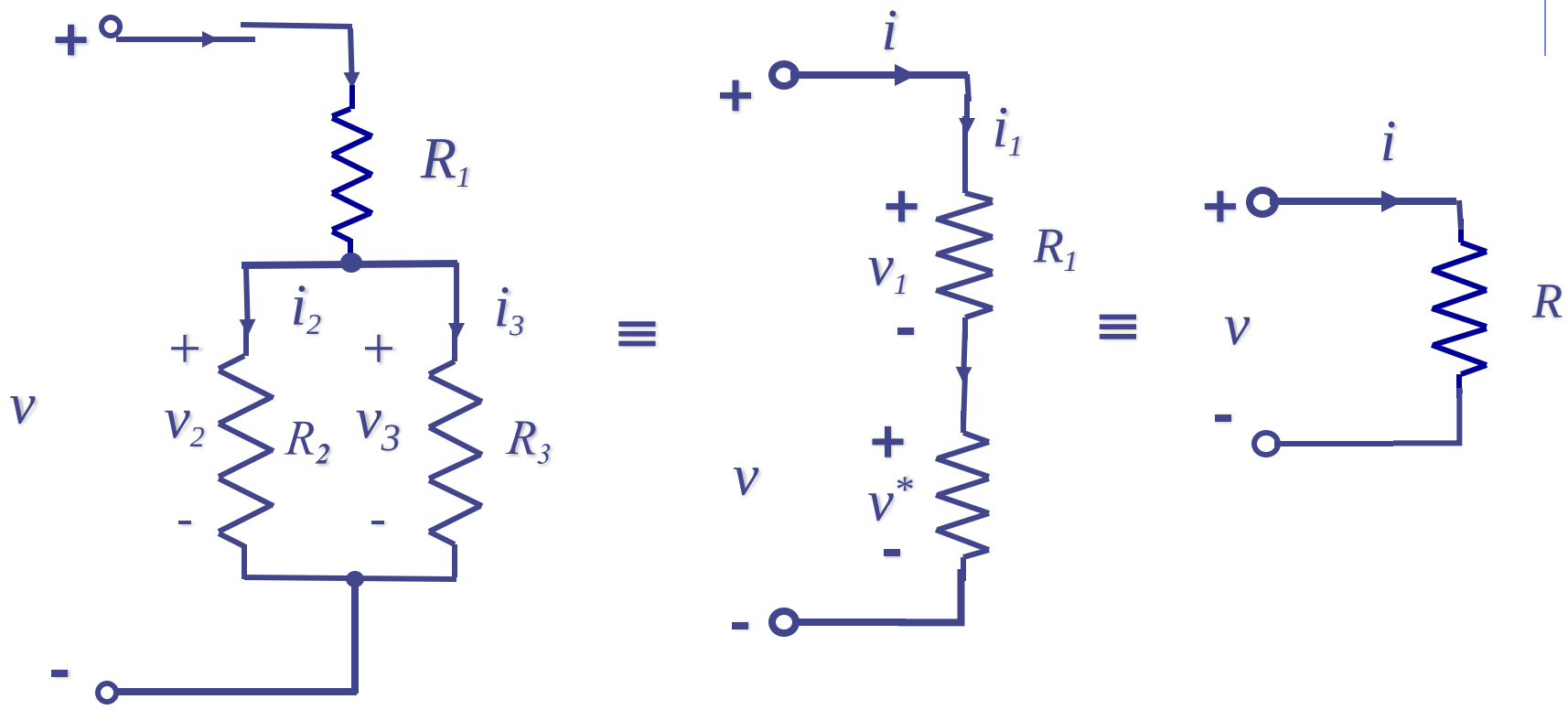

Fig.5.15 Series-parallel connection of resistors and its successive reduction

If the characteristics of $\mathcal{R}_1$, $\mathcal{R}_2$ and $\mathcal{R}_3$ are specified graphically, we need first to determine graphically the characteristic of $\mathcal{R}^*$, the resistor equivalent to the parallel connection of $\mathcal{R}_2$ and $\mathcal{R}_3$, and second to determine graphically the characteristic of R, the resistor equivalent to the series connection of $\mathcal{R}_1$ and $\mathcal{R}^*$.

Let us assume that the characteristics of $\mathcal{R}_2$ and $\mathcal{R}_3$ are voltage controlled and specified by

$$i_2 = g_2(v_2) \qquad \text{and} \qquad i_3 = g_3(v_3) \tag{5.17}$$

where $g_2(\cdot)$, and $g_3(\cdot)$, are single-valued functions. The parallel connection has an equivalent resistor $\mathcal{R}^*$, which is characterized by

$$i^* = g(v^*) \tag{5.18}$$

where i^* and v^* are the branch current and voltage of the resistor $\mathcal{R}^*$ as shown in Fig. 5.15. The parallel connection requires the voltages v_2 and v_3 to be equal to v^*. The resulting current i^* is the sum of i_2 and i_3 . Thus, the characteristic of $\mathcal{R}^*$, is related to those of $\mathcal{R}_2$ and $\mathcal{R}_3$ by

$$g(v^*) = g_2(v^*) + g_3(v^*) \quad \text{for all } v^* \tag{5.19}$$

Let $g_2(\cdot)$, and $g_3(\cdot)$, be specified as shown in Fig.5.16. Then $g(\cdot)$ is obtained by adding the two functions

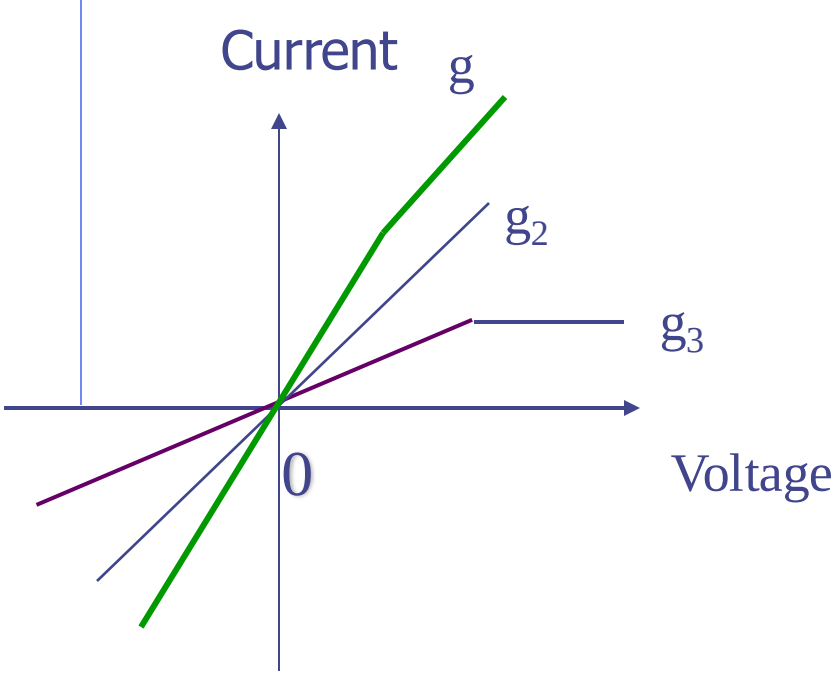

$$g(\cdot) = g_2(\cdot) + g_3(\cdot)$$

(a)

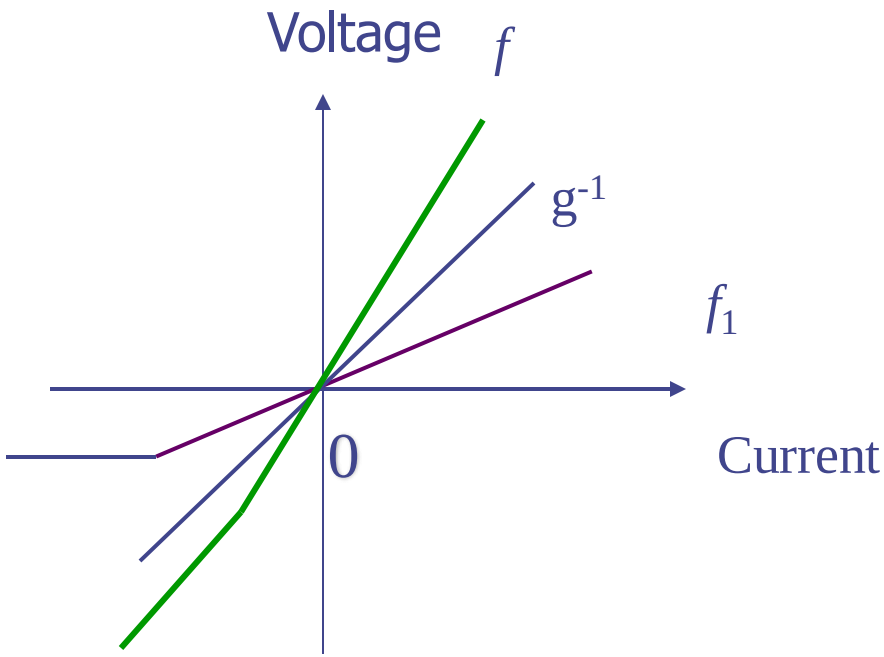

$$f(\cdot) = f_1(\cdot) + g^{-1}(\cdot)$$

(b)

Fig. 5.16 Example 1: the series-parallel connection of resistors

The next step is to obtain the series connection of $\mathcal{R}_1$ and $\mathcal{R}^*$. Let us assume that the characteristic of $\mathcal{R}_1$ is current controlled an specified by

$$v_1 = f_1(i_1) \tag{5.20}$$

where $f_1(\cdot)$ is a single-valued function as shown in Fig. 5.16b. The series connection of $\mathcal{R}_1$ and $\mathcal{R}^*$ has an equivalent resistor $\mathcal{R}$ as shown in Fig 5.15. The characteristic of $\mathcal{R}$ as specified by

$$v = f(i) \tag{5.21}$$

Is to be determined. Obviously the series connection forces the currents i_1 and i^* to be the same and equal to i. The voltage v is simply the sum of v_1 and v^*. However in order to add the two voltages we must first to be able to express v^* in terms of i^* . From (5.18) we can write

$$v^* = g^{-1}(i^*) \tag{5.22}$$

where $g^{-1}(\cdot)$ is inverse of the function $g_1(\cdot)$ (See Fig. 5.16b). Thus the series connection of $\mathcal{R}_1$ and $\mathcal{R}^*$ is characterized by $f(\cdot)$ of (5.21) where

$$f(\cdot) = f_1(\cdot) + g^{-1}(\cdot) \text{ for all } i$$

Thus, the critical step in the derivation is the question of whether $g^{-1}(\cdot)$ exists as a single –valued function. If the inverse does not exist, the reduction procedure fails; indeed, no equivalent representation exist in terms of single –valued functions.

One simple criterion that guarantees the existence of such a representation is that all resistors have strictly monotonically increasing characteristics.

In the case of linear resistors with positive resistance and monotonic increasing we can easily write the following:

$$R = R_1 + \frac{1}{1/R_2 + 1/R_3} \qquad (5.23)$$

where R, R_1,R_2 and R_3 are respectively, the resistances $\mathcal{R}$, $\mathcal{R}_1$,$\mathcal{R}_2$ and $\mathcal{R}_3$

Exercise

The circuit in Fig. 5.17 is called an infinite-ladder network. All resistors are linear; the series resistors have resistance R_s and shunt resistors have resistance R_p.

Determine the input resistance R, that is the resistance of the equivalent one-port.

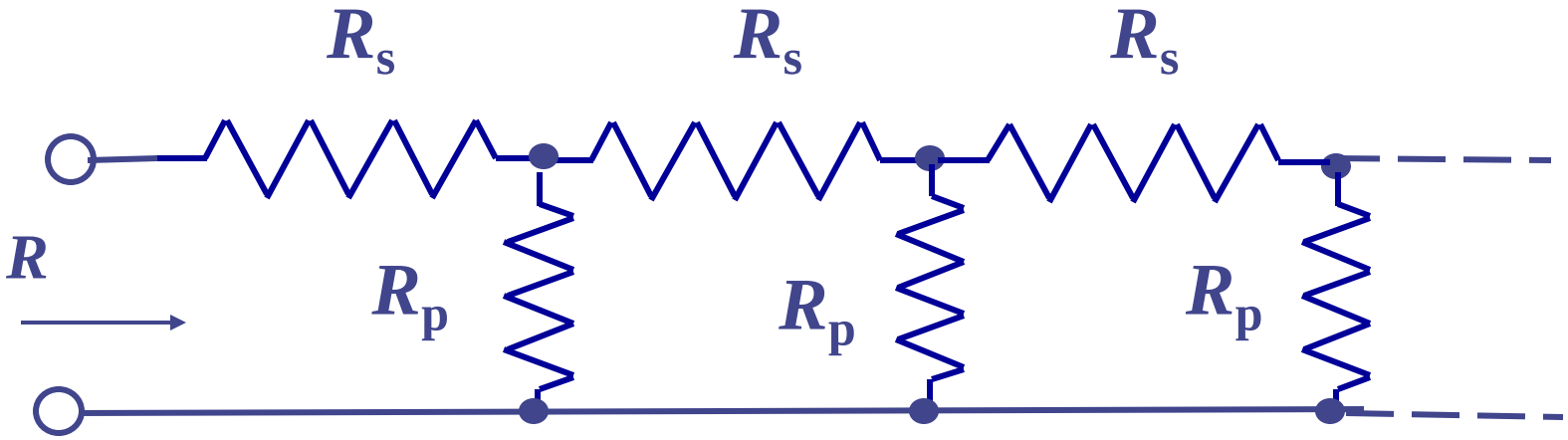

Fig. 5.17 An infinite ladder of linear resistors. R_s is called the series resistance, and R_p is called the shunt resistance. R is input resistance.

Example 2

Consider the simple circuit, shown in Fig. .18, where $\mathcal{R}_1$ and $\mathcal{R}_2$ are voltage-controlled resistors characterized by

$$i_1 = 6 + v_1 + v_1^2 \quad \text{and} \quad i_2 = 3v_2 \tag{5.24}$$

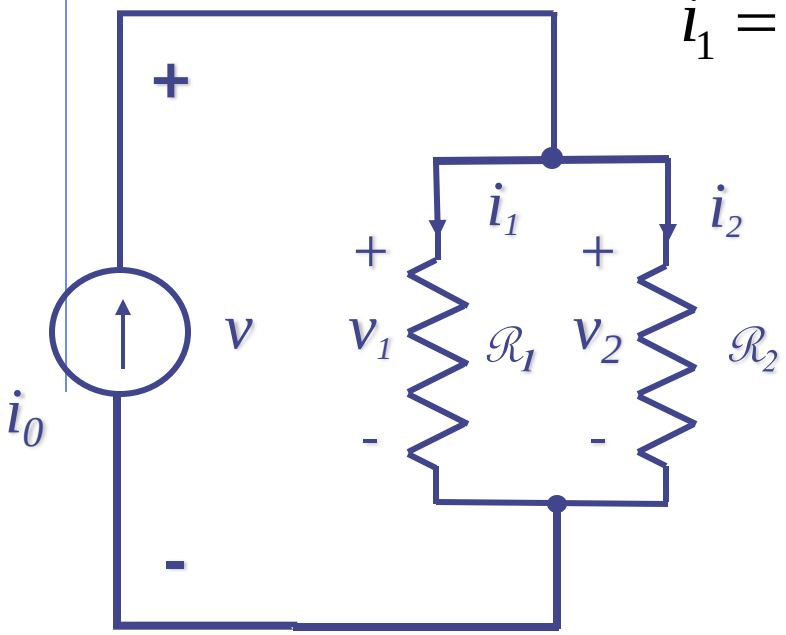

Fig. 5.18 Parallel connection of resistors and a current source.

i_0 is a constant source of 2 amp. We wish to determine the currents i_1 and i_2 the voltage v. Since $v=v_1=v_2$, the characteristic of the equivalent resistor of the parallel combination is simply

$$i = i_1 + i_2 \tag{5.25}$$
$$= 6 + v + v^2 + 3v = 6 + 4v + v^2$$

To obtain the voltage v for $i=i_0=2$ amp, we need to solve Eq.(5.25). Thus

$$v^2 + 4v + 6 = 2 \qquad \text{or}$$

v=-2 volts (5.26)

Since $v=v_1=v_2$, substituting (5.26) in (5.24) we obtain

i

i_1=8 amp

and

i_2=-6 amp

Exercise

Determine the power dissipated in each resistor and show that the sum of their power dissipations is equal to the power delivered by the current source

Example 3

In the ladder of Fig.5.19, where all resistors are linear and time-invariant, there are four resistors shown. A voltage source of V_0=10 volts is applied. Let R_s=2 ohm and R_p=1ohm.

Determine the voltage v_a and v_b.

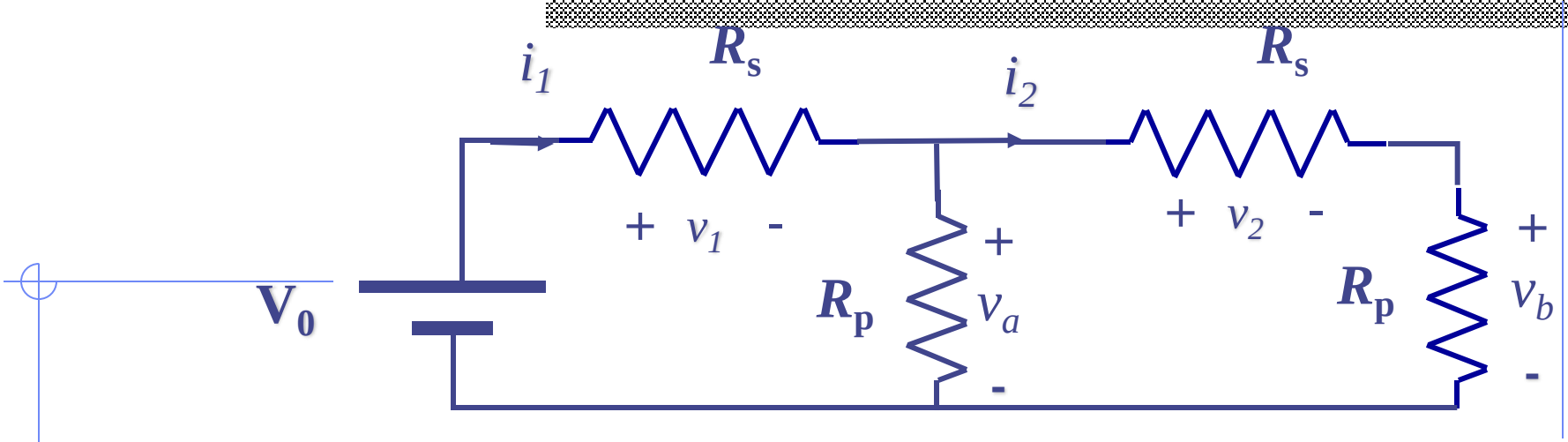

Fig. 5.19 A ladder with linear resistors

We first compute the input resistance R of the equivalent one-port that is face by the voltage source V_0. Base on the method of series-parallel connection of resistors we obtain a formula similar to Eq.5.23; thus

$$R = R_s + \frac{1}{1/R_p + 1/(R_s + R_p)} = 2 + \frac{1}{1 + \frac{1}{3}} = 2\frac{3}{4} \quad \text{ohms}$$

Thus the current i_1 is given by

$$i_1 = \frac{V_0}{R} = \frac{10}{2\frac{3}{4}} = \frac{40}{11} amp$$

The branch voltage v_1 is given by

$$v_1 = R_s i_1 = \frac{80}{11} volts$$

Using KVL for the first mesh, we obtain

$$v_a = V_0 - v_1 = \frac{30}{11} volts$$

Knowing v_a, we determine

$$i_2 = \frac{v_a}{R_s + R_p} = \frac{30/11}{3} = \frac{10}{11} amp$$

From Ohm's law we have

$$v_b = R_p i_2 = \frac{10}{11} volts$$

Thus by successive use of Kirchhoffs laws and Ohm's law we can determine the voltages and currents of any series-parallel connection of linear resistors.

Example 4

Consider the bridge circuit of Figure 5.20. Note that this is not of the form of a series-parallel connection. Assume that the four resistance are the same. Obviously, because of Symmetry the battery current i_b must divide equally at node A and also at node B; that is $i_1=i_2=i_b/2$ and $i_3=i_4=i_b/2$. Consequently the current i_5 must be zero.

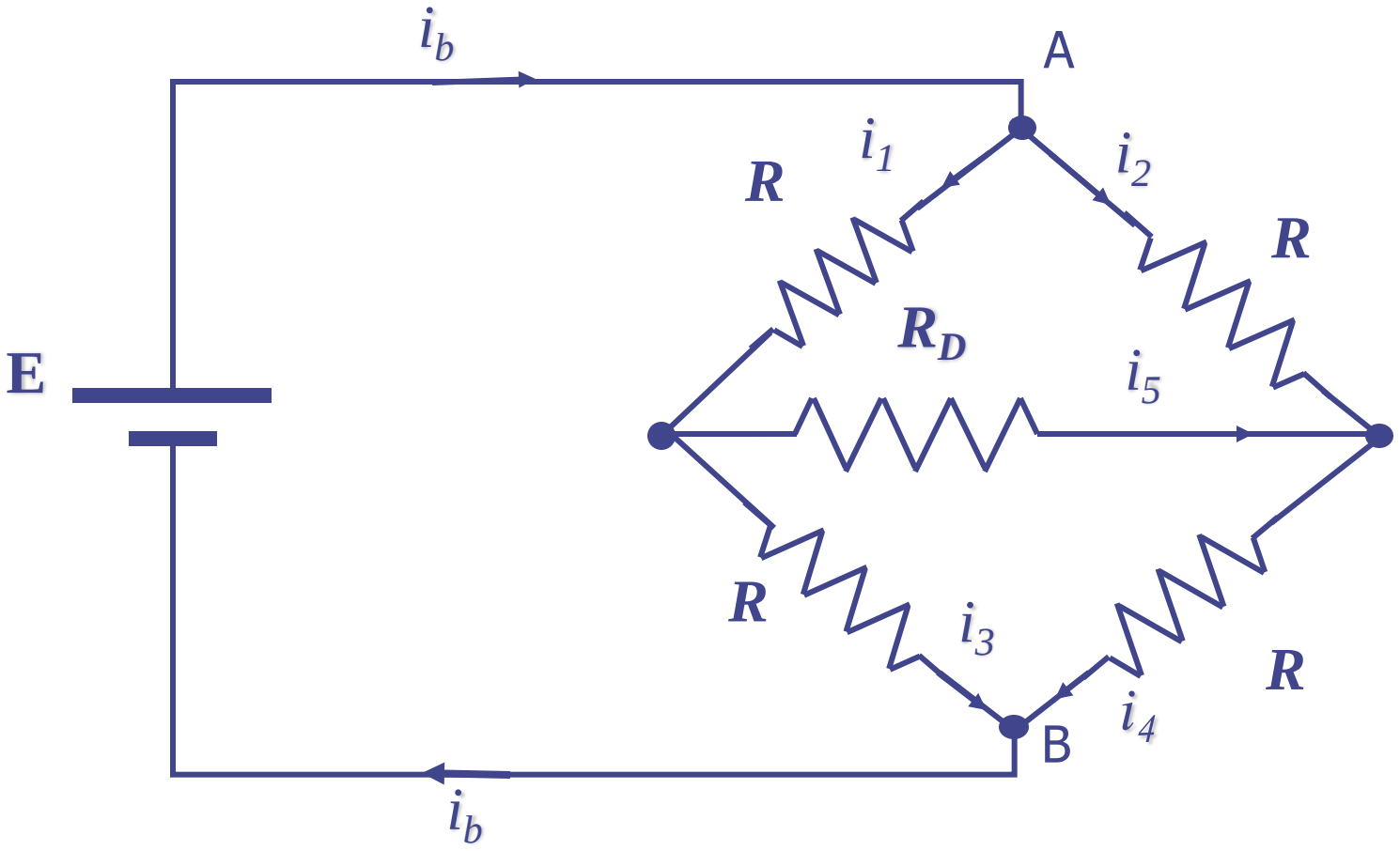

Fig.5.20 A symmetric bridge circuit

Circuits with Capacitors or Inductors

Series Connection of Capacitors

Consider the series connection of capacitors as illustrated by Fig. 5.21. The branch characterization of linear-invariant capacitor is

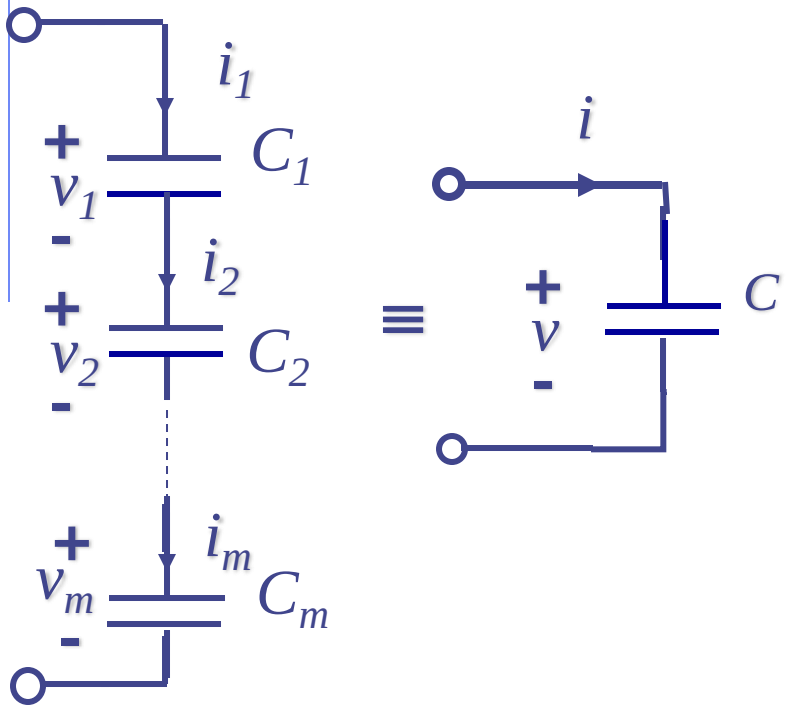

Fig. 5.21 Series connection of capacitors

$$v_k(t) = v_k(0) + \frac{1}{C_k}\int_0^t i_k(t')dt' \qquad (5.27)$$

Using KCL at all nodes, we obtain

$$i_k(t) = i(t) \qquad k = 1,2,\ldots,m \qquad (5.28)$$

Using KVL, we have

$$v(t) = \sum_{k=1}^{m} v_k(t) \qquad (5.29)$$

At $t=0$

$$v(0) = \sum_{k=1}^{m} v_k(0) \qquad (5.30)$$

Combining Eqs. (5.27) to (5.30), we obtain

$$v(t) = v(0) + \sum_{k=1}^{m} \frac{1}{C_k} \int_0^t i(t')dt' \tag{5.31}$$

Therefore the equivalent capacitor is given by

$$\frac{1}{C} = \sum_{k=1}^{m} \frac{1}{C_k} \tag{5.32}$$

The series connection of m linear time-invariant capacitors, each with value C_k and initial voltage $v_k(0)$, is equivalent to a single linear time-invariant capacitor with value C, which is given by Eq. (5.32) and initial voltage

$$v(0) = \sum_{k=1}^{m} v_k(0) \tag{5.33}$$

Connecting Capacitors in Series

What is the Equivalent Capacitance?

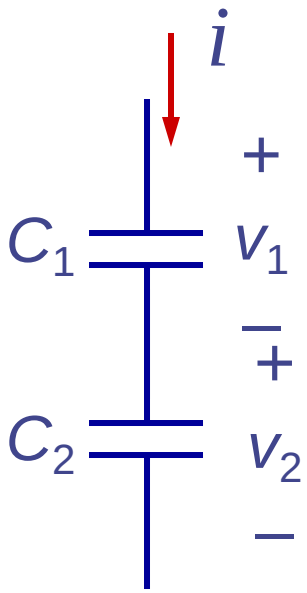

Can find using….

- Circuit theory
- Physical argument

Here's the result:

$$C_{eq} = \frac{C_1 C_2}{C_1 + C_2}$$

Let's show why…

- Circuit method

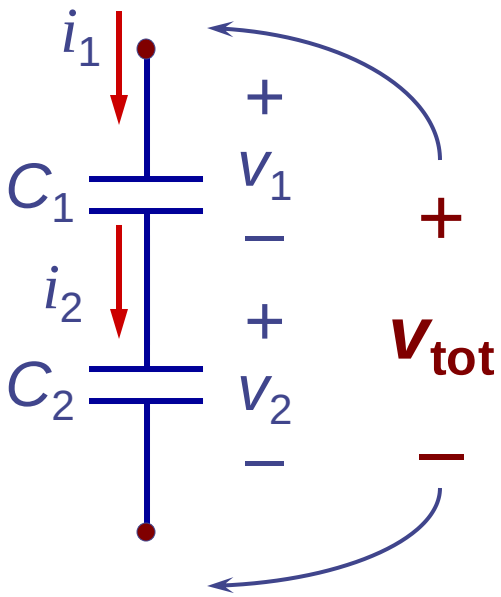

$q_1 = C_1 v_1$

$q_2 = C_2 v_2$

i_1 increases q_1; i_2 increases q_2

$\Delta q_1 = i_1 \Delta t$ $\Delta q_2 = i_2 \Delta t$

But $i_1 = i_2$

$\Delta q_1 = \Delta q_2$

$\Delta q_1 = \Delta q_2$

Assume C_1 and C_2 are uncharged until current turned on

$q_1 = q_2$

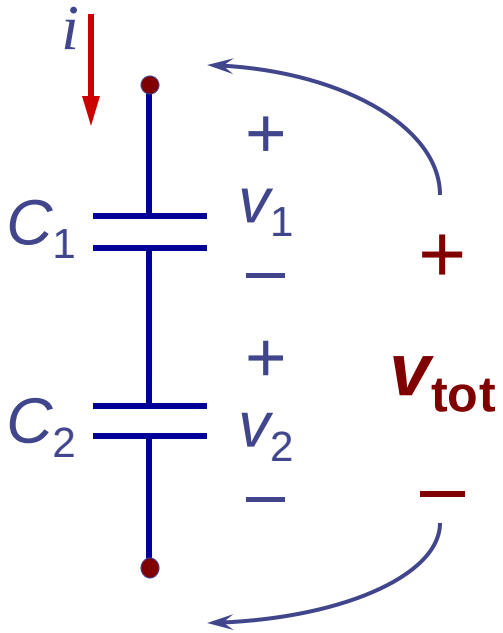

Goal: Find C_{eq} such that

$$q = C_{eq} v_{tot}$$

Where: $v_{tot} = v_1 + v_2$

$$v_{tot} = \frac{q_1}{C_1} + \frac{q_2}{C_2}$$

$$v_{tot} = q\left(\frac{1}{C_1} + \frac{1}{C_2}\right)$$

$$\frac{q}{C_{eq}} = \frac{q}{C_1} + \frac{q}{C_2} \rightarrow \frac{1}{C_{eq}} = \frac{1}{C_1} + \frac{1}{C_2} \rightarrow C_{eq} = \frac{C_1 C_2}{C_1 + C_2}$$

Parallel Connection of Capacitors

For the parallel connection of m capacitors we must assume that all capacitors have the same initial voltages, for otherwise KVL is violated at $t=0$. It is easy to show that for the parallel connection of m linear time invariant capacitors with the same voltage $v_k(0)$, the equivalent capacitor is equal to

$$C = \sum_{k=1}^{m} C_k \tag{5.34}$$

and

$$v(0) = v_k(0) \tag{5.35}$$

See Fig. 5.22.

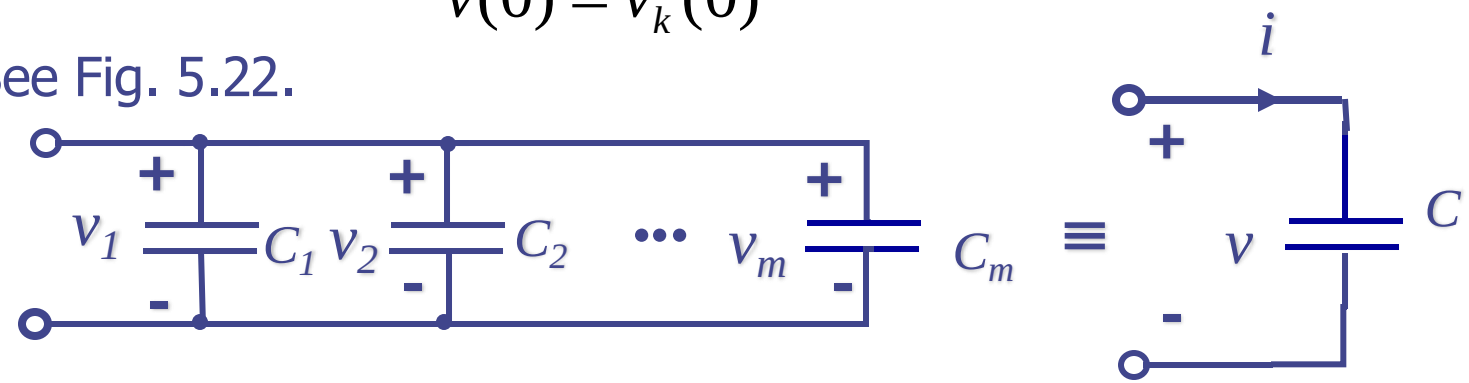

Fig. 5.22 Parallel connection of linear capacitors

Example

Let us consider the parallel connection of two linear time invariant capacitors with different voltages. In Fig. 5.23, capacitor 1 has capacitance C_1 and voltage V_1, and capacitor 2 has capacitance C_2 and voltage V_2. At $t=0$, the switch is closed so that the two capacitors are connected in parallel. What is a voltage across the parallel connection right after the closing of the switch?

From (5.34) the parallel connection has an equivalent capacitance

$$C = C_1 + C_2 \tag{5.36}$$

At t=0- the charge store in two capacitance is

$$Q(0-) = Q_1(0-) + Q_2(0-) = C_1V_1 + C_2V_2 \tag{5.37}$$

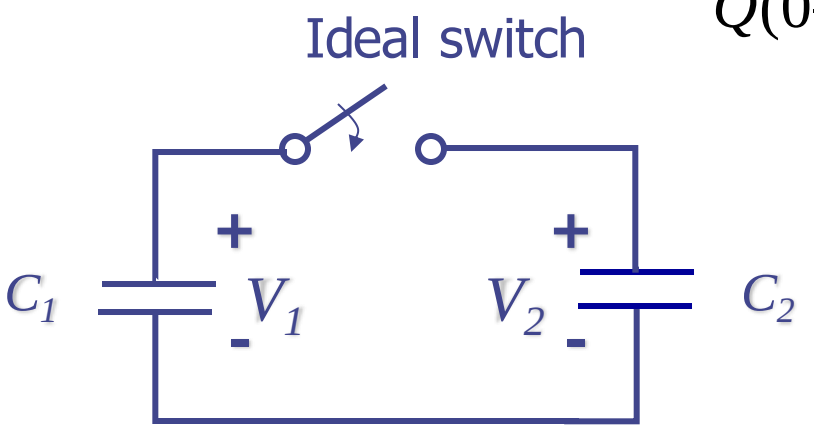

Fig.5.23 The parallel connection of two capacitors with different voltages

Since it is a fundamental principle of physics that electric charge is conserved at t=0+

$$Q(0+) = Q(0-) \tag{5.38}$$

From (5.36) through (5.38) we can derive the new voltage across the parallel connection of the capacitors

Let the new voltage be V; then

$$CV = C_1V_1 + C_2V_2$$

or

$$V = \frac{C_1V_1 + C_2V_2}{C_1 + C_2} \qquad (5.39)$$

Physically this phenomenon can be explained as follows: Assume V_1 is larger than V_2 and C_1 is equal C_2; thus, at time $t=0$-, the charge $Q_1(0-)$ is bigger than $Q_2(0-)$. At the time when the switch is closed, $t=0$, some charge is dumped from the first capacitor to the second instantaneously. This implies that an impulse of current flows from capacitor 1 to capacitor 2 at $t=0$. As a result, at $t=0+$, the voltages across the two capacitors are equalized to the intermediate value V required by the conservation of charge.

Connecting Capacitors in Parallel

What is the Equivalent Capacitance?

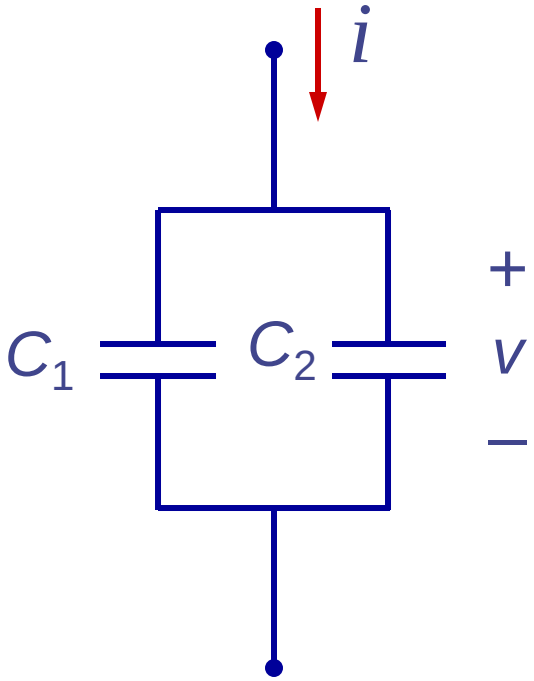

Can find using….

- Circuit theory
- Physical argument

Circuit Method

What do we know?

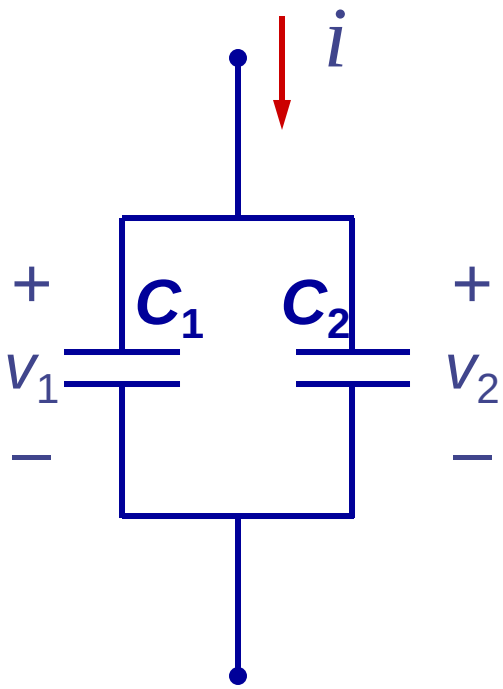

$$v_1 = v_2 = v$$

$$Q_1 = C_1 v_1$$

$$Q_2 = C_2 v_2$$

$$i = \frac{dQ_1}{dt} + \frac{dQ_2}{dt}$$

Combine:

Constants

$$i = \frac{dC_1 v_1}{dt} + \frac{dC_2 v_2}{dt} = (C_1 + C_2)\frac{dv}{dt}$$

← Same voltage

$$i = (C_1 + C_2)\frac{dv}{dt}$$

Equivalent Capacitance

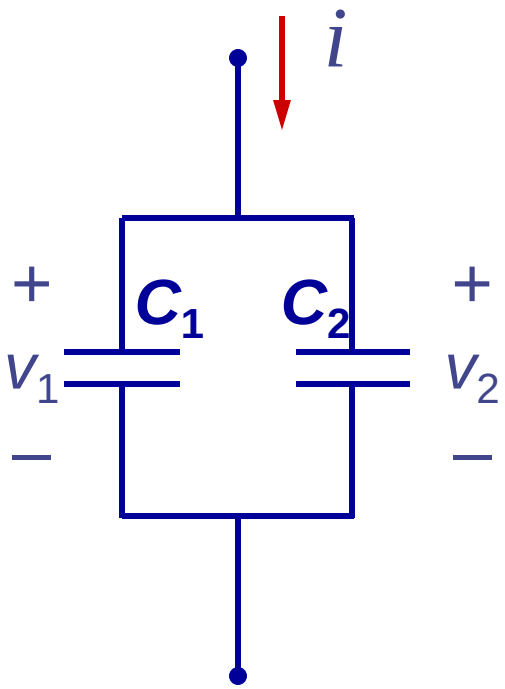

Capacitors in Parallel:

$$C_{eq} = C_1 + C_2$$

$$i = C_{eq}\frac{dv}{dt}$$

Physical Motivation:

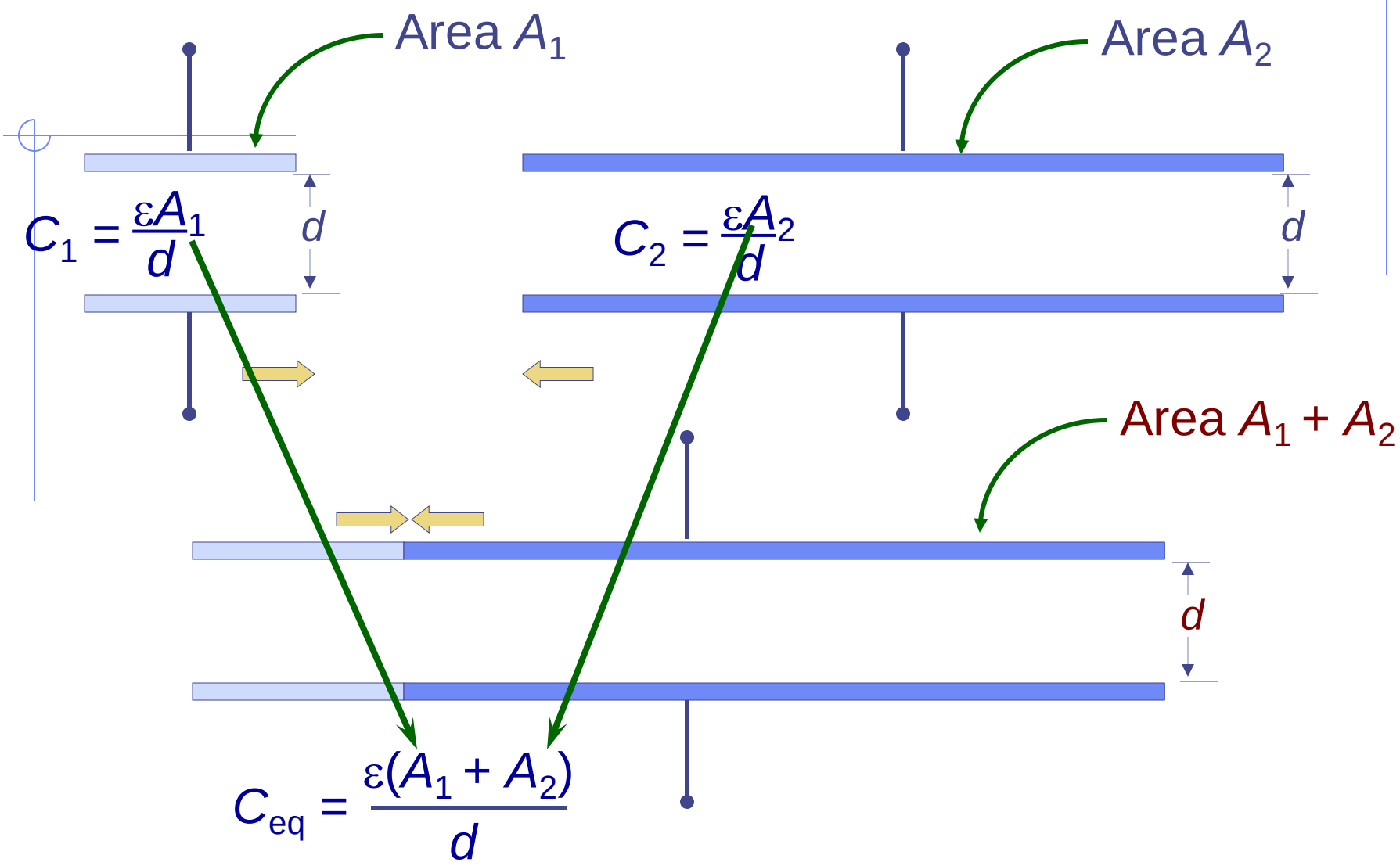

$$C_{eq} = C_1 + C_2$$

Series Connection of Inductors

The series connection of m linear time-invariant inductors is shown in Fig.5.24. Let the inductors be specified by

$$v_k = L_k \frac{d}{dt} i_k \qquad k = 1,2,...,m \tag{5.40}$$

and let the initial currents be $i_k(0)$. Using KCL at all nodes,we have

$$i = i_k \qquad k = 1,2,...,m \tag{5.41}$$

Thus, at $t=0$, $i(0)=i_k(0)$, $k=1,2,..,m$. KCL requires that in the series connection of m inductors all the initial value of the currents through the inductors must be the same. Using KVL, we obtain

$$v = \sum_{k=1}^{m} v_k \tag{5.42}$$

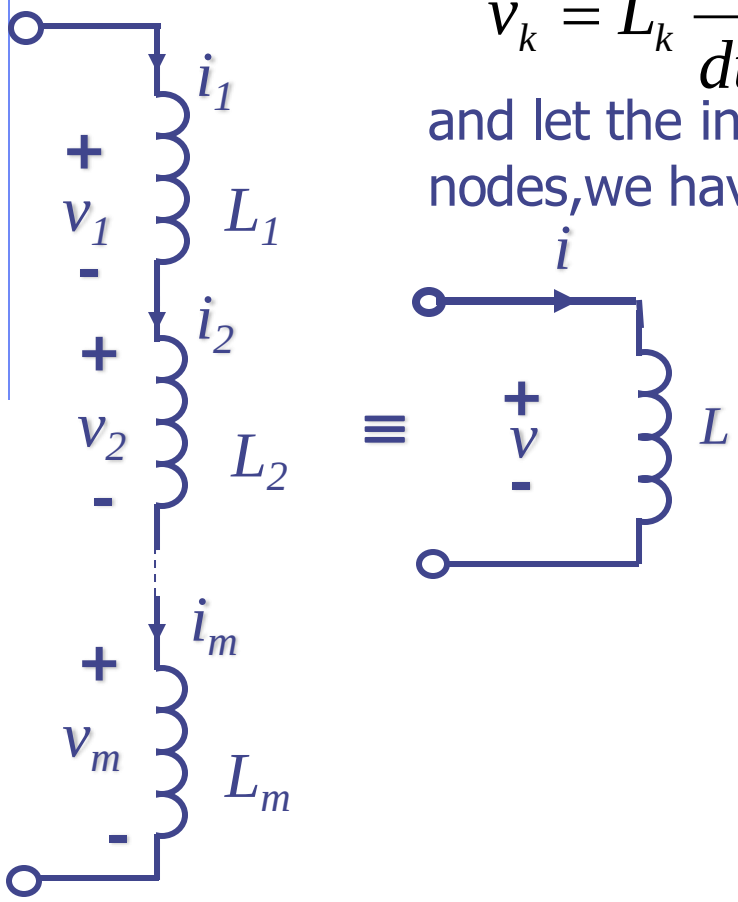

Fig. 5.24. Series connection of linear inductors

Combining Eqs. (5.40) to (5.42), we have

$$v = \sum_{k=1}^{m} L_k \frac{di}{dt} \tag{5.43}$$

Therefore, the equivalent inductance is given by

$$L = \sum_{k=1}^{m} L_k \tag{5.44}$$

The series connection of m linear time-invariant inductors each with L_k and initial current $i(0)$, is equivalent to single inductor of inductance $L = \sum_{k=1}^{m} L_k$ with the same initial current i(0).

Parallel Connection of Inductors

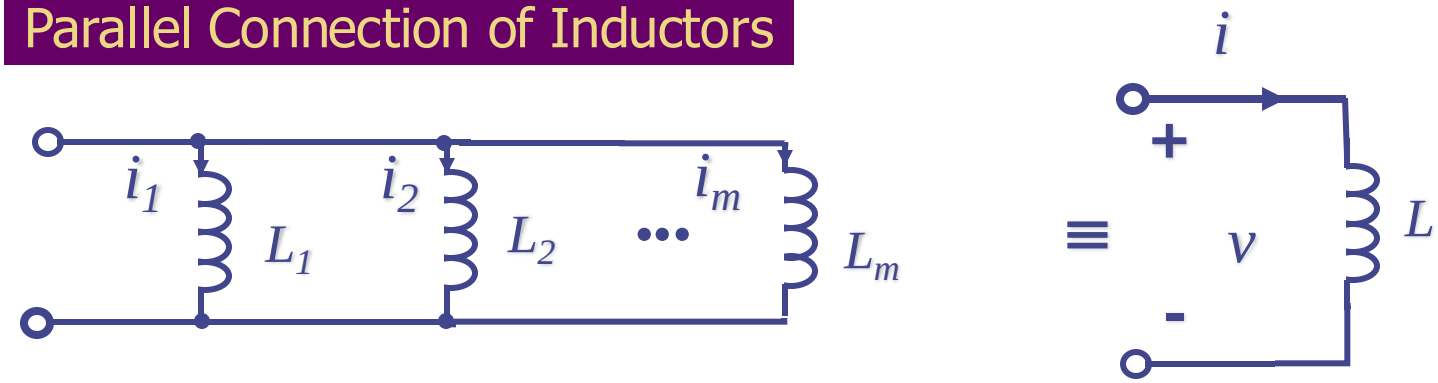

Parallel Connection of Inductors

We can similarly derive the parallel connection of linear time-invariant inductors shown in Fig.5. 25. This result is simply expressed by the following equations:

$$\frac{1}{L} = \sum_{k=1}^{m} \frac{1}{L_k} \tag{5.45}$$

and

$$i(0) = \sum_{k=1}^{m} i_k(0) \tag{5.46}$$

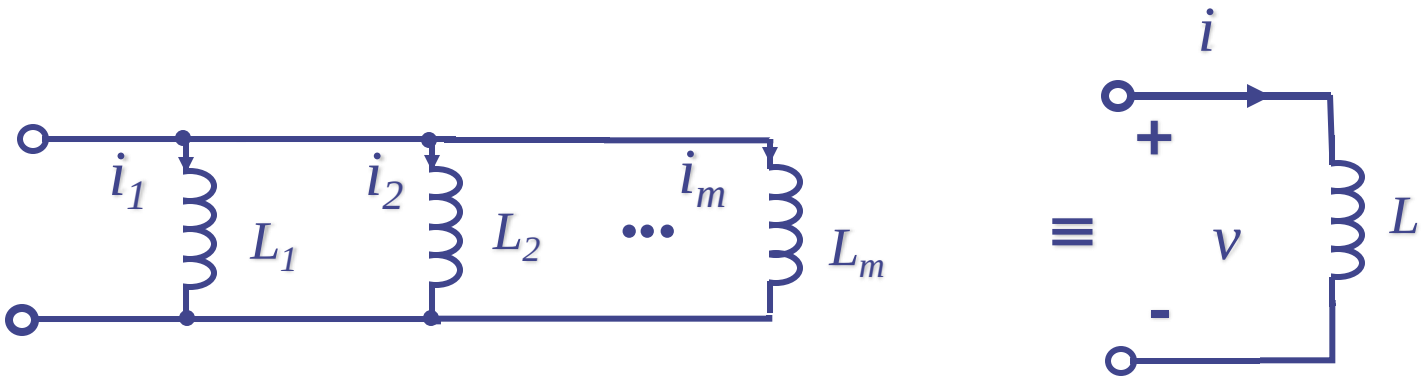

Fig. 5.25 Parallel connection of linear inductors

Inductors in Series and Parallel

Inductors combine like resistors

Series



$$L_{eq} = L_1 + L_2$$

Parallel

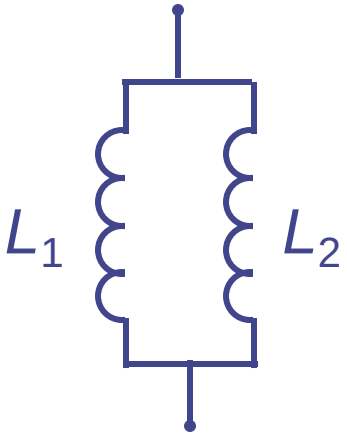

$$L_{eq} = \frac{L_1 L_2}{L_1 + L_2}$$

Summary

In a series connection of elements, the current in all elements is the same. The voltage across the series connection is the sum of voltage across each individual element.

In parallel connection of elements, the voltage across all elements is the same. The current through the parallel connection is the sum of the currents through each individual element.

Type of elements	Series connection of m elements	Parallel connection of m elements
Resistors R=resistance G=conductance	$R = \sum_{k=1}^{m} R_k$	$G = \sum_{k=1}^{m} G_k$
C=capacitance S=elastance	$\frac{1}{C} = \sum_{k=1}^{m} \frac{1}{C_k}$	$C = \sum_{k=1}^{m} C_k$
Inductors L=inductance	$L = \sum_{k=1}^{m} L_k$	$\frac{1}{L} = \sum_{k=1}^{m} \frac{1}{L_k}$

Lecture 6

- **First order Circuits (i).**
- Linear time-invariant first-order circuit, zero input response.
- The *RC* circuits.
  - Charging capacitor
  - Discharging capacitor
- The *RL* circuits.
- The zero-input response as a function of the initial state.
- Mechanical examples.
- Zero-state response (Constant current input, Sinusoidal input).
- Complete response: transient and steady-state.

Why first order?

In this lecture we shall analyze circuits with more than one kind of element; as a consequence, we shall have to use differentiation and/or integration.

We shall restrict ourselves here to circuits that can be described by first-order differential equations; hence we give them the name *first-order circuits*

Linear Time –invariant First order Circuit. Zero-input Response

The *RC* Circuits

In the circuit of Fig.6.1., the linear time-invariant capacitor with capacitance C is charged to a potential V_0 by a constant voltage source. At $t=0$ the switch k_1 is opened, and switch k_2 is closed simultaneously.

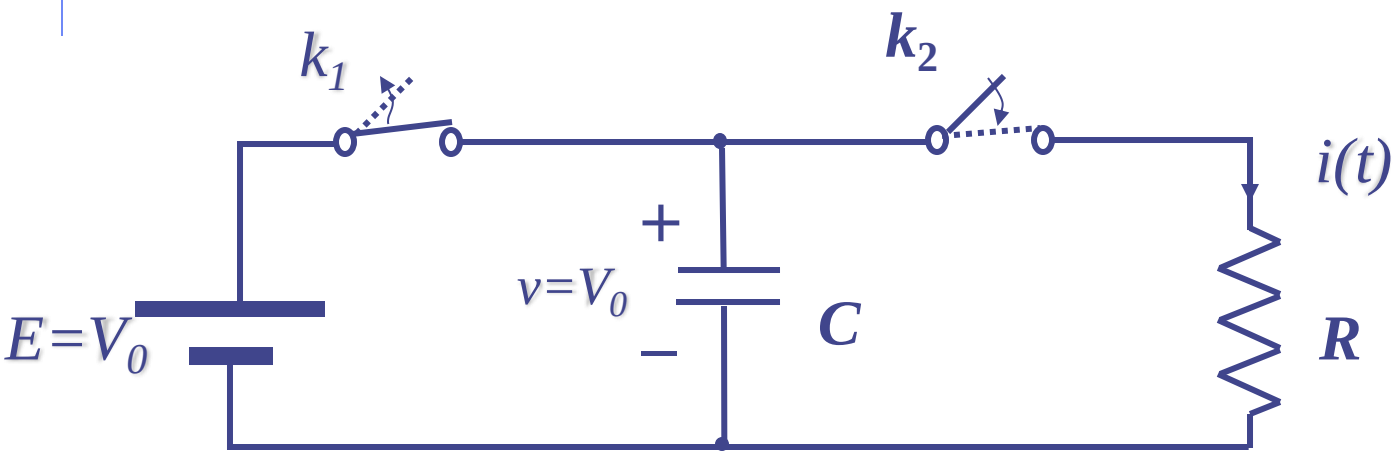

Fig.6.1 A charged capacitor is connected to a resistor (k_1, opens and k_2 closes at t=0).

Thus the charged capacitor is disconnected from the source and connected to the linear time-invariant resistor with resistance R at $t=0$.

Let us describe physically what is going to happen. Because of the charges stored in the capacitor $(Q_0=CV_0)$ a current will flow in the direction specified by the reference direction assigned to $i(t)$, as shown in Fig. 6.1. The charge across the capacitor will decrease gradually and eventually will become zero; the current i will do the same. During the process the electric energy stored in the capacitor is dissipated as heat in the resistor.

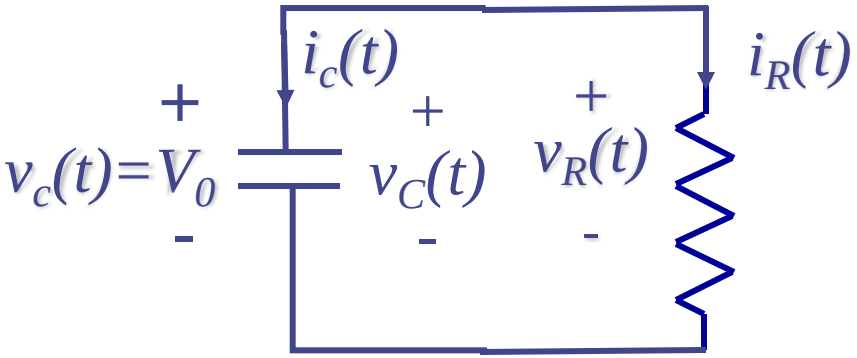

Fig.6.2 An RC circuit, $v_c(0)=V_0$

Let us restricting our attention to $t\geq 0$, we redraw the RC circuit as shown in Fig.6.2. Note that the reference direction for branch voltages and branch currents are clearly indicated. V_0 along with the positive and negative sins next to the capacitor, specifies the magnetite and polarity of the initial voltage.

Kirchoff`'s laws and topology dictate the following equations:

KVL: $$v_C(t) = v_R(t) \qquad t \geq 0 \qquad (6.1)$$

KCL: $$i_C(t) + i_R(t) = 0 \qquad t \geq 0 \qquad (6.2)$$

The two branch equations for the two circuit elements are

Resistor: $$v_R(t) = Ri_R \qquad (6.3)$$

Capacitor: $$i_C = C\frac{dv_C}{dt} \quad \text{and} \quad v_C = V_0 \qquad (6.4a)$$

or, equivalently

$$v_C = V_0 + \frac{1}{C}\int_0^t i_C(t')dt' \qquad (6.4b)$$

In Eq.(6.4a) we want to emphasize that the initial condition

Of the capacitor voltage must be written together with $i_C = C\frac{dv_C}{dt}$; otherwise, the state of the capacitor is not completely specified.

This is made obvious by the alternate branch equation (6.4b)

Finally we have four equations for four unknown in the circuit, namely, the two branch voltages v_C and v_R and two branch currents i_C and i_R.

A complete mathematical description of the circuit has been given and we can solve for any or all of the unknown parameters. If we wish to find the voltage across the capacitor, the combining Eqs (6.1) to (6.4a) we obtain for t≥0,

$$C\frac{dv_C}{dt} = i_C = -i_R = -\frac{v_R}{R} = -\frac{v_C}{R} \text{ and } v_C = V_0$$

$$C\frac{dv_C}{dt} + \frac{v_C}{R} = 0 \quad t \geq 0 \text{ and } v_C = V_0 \qquad (6.5)$$

This is a first-order linear homogeneous differential equation with constant coefficients. Its solution is of the exponential form

$$v_C(t) = Ke^{s_0 t} \tag{6.6}$$

where

$$s_0 = -\frac{1}{RC} \tag{6.7}$$

This easily verified by direct substitution of Eqs. (6.6) and (6.7) in the differential equation (6.5). In (6.6) K is a constant to be determined from the initial conditions. Setting $t=0$ in Eq.(6.6), we obtain $v_C(0)=K=V_0$. Therefore, the solution to the problem is given by

$$v_C(t) = V_0 e^{-\left(\frac{1}{RC}\right)t} \qquad t \geq 0 \tag{6.8}$$

In Eq.(6.8), $v_C(t)$ is specified for $t \geq 0$ since for negative t the voltage across the capacitor is a constant, according to our original physical specification.

The voltage $v_C(t)$ is plotted in Fig. 6.3 as a function of time. Of course, we can immediately the other three branch variables once $v_C(t)$ is known. From Eq.(6.4a) we have

$$i_C(t) = C\frac{dv_C}{dt} = -\frac{V_0}{R}e^{-\left(\frac{1}{RC}\right)t} \qquad t \geq 0 \tag{6.9}$$

From Eq.(6.2) we have

$$i_R(t) = -i_C(t) = \frac{V_0}{R}e^{-\left(\frac{1}{RC}\right)t} \qquad t \geq 0 \tag{6.10}$$

From Eq. (6.3) we have

$$v_C(t) = v_R(t) = V_0 e^{-\left(\frac{1}{RC}\right)t} \qquad t \geq 0 \tag{6.11}$$

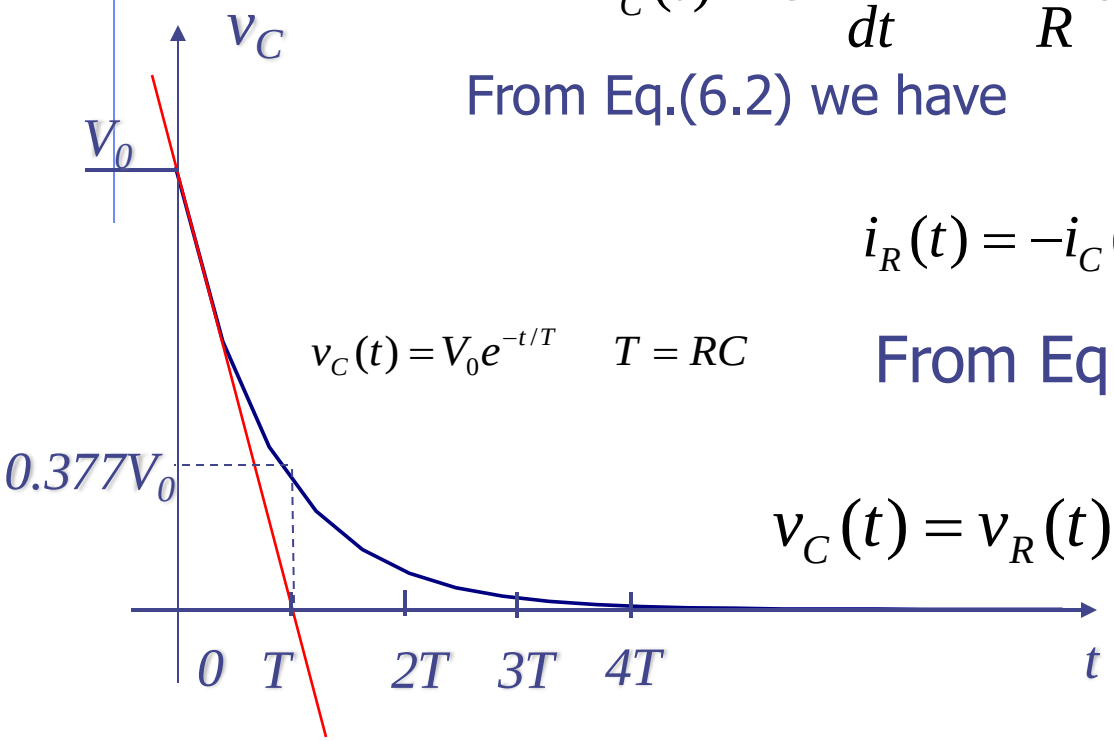

Fig.6.3 The discharge of the Capacitor of Fig. 6.2 is given by an experimental curve

Exercise

Show that the red line in Fig. 6.3, which is tangent to the curve $v_c(t)=0+$, intersects the time axis at the abscissa T

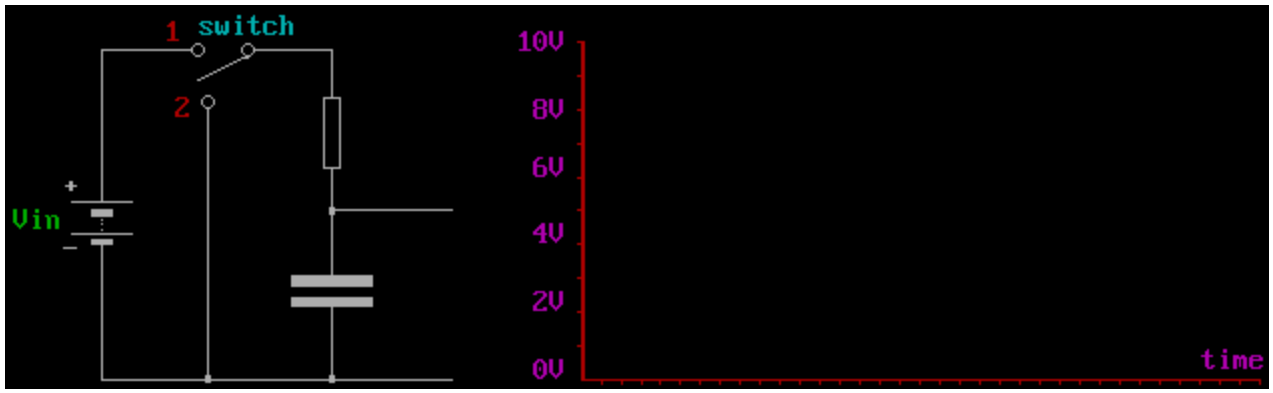

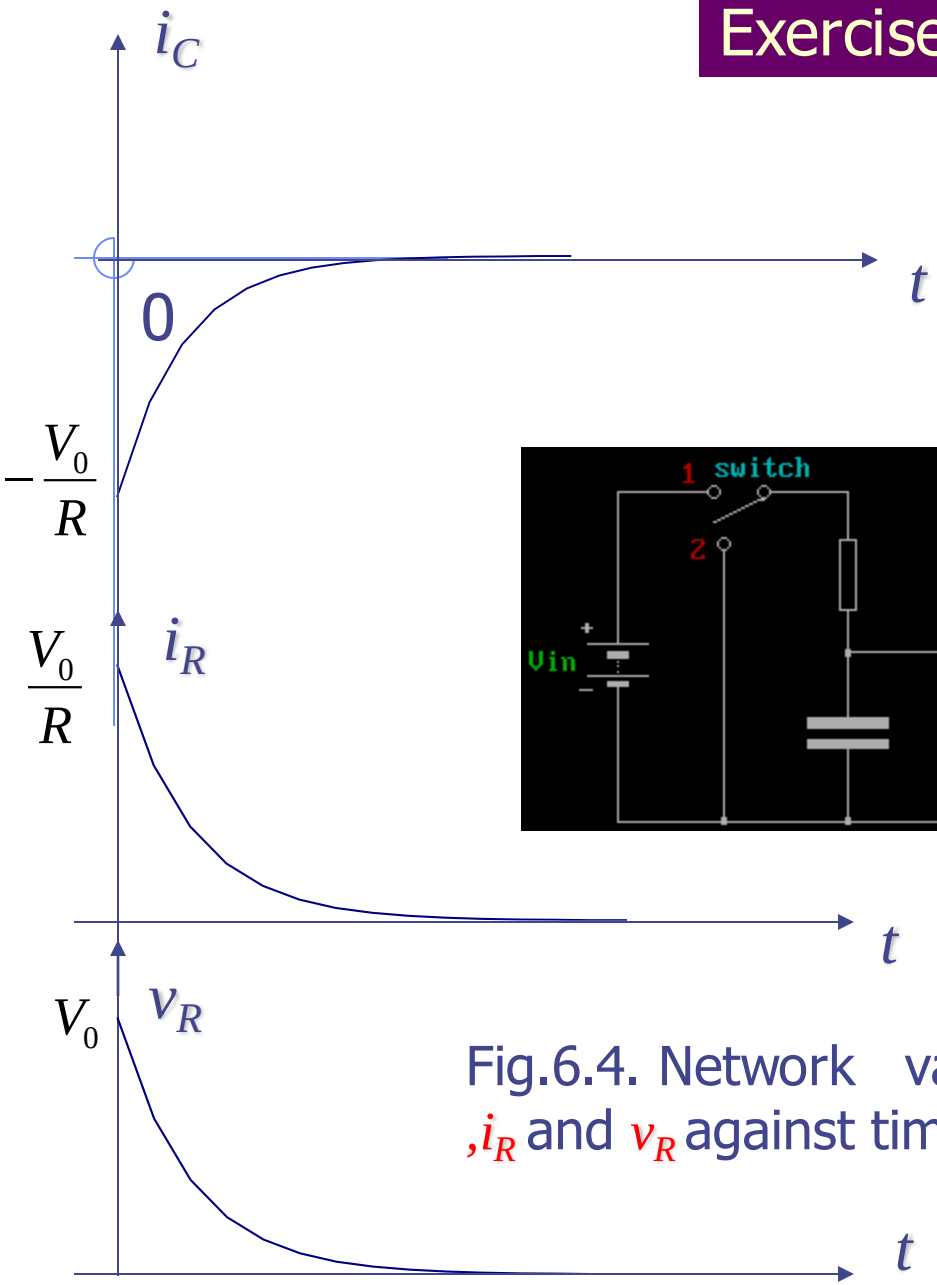

Fig.6.4. Network variables i_C ,i_R and v_R against time for t≥0.

Let us study the waveform $v_c(\cdot)$ more carefully. The voltage across the capacitor decreases exponentially with time, as shown in Fig. 6.3. An exponential curve can be characterized by two numbers, namely the ordinate of the curve at a reference time say $t=0$ and the time constant T which is defined by $f(t) = f(0)e^{-t/T}$.

In Fig. 6.3 we have $f=V_0$ and $T=RC$.

Remark

The term $s_0=-1/T=-1/RC$ in Eqs.(6.6) and (6.7 has a dimension of reciprocal time of frequency and is measured in radians per second. It is called the natural frequency of the circuit.

Exercise

Recall that the unit of capacitance is the farad and the unit of resistance is the ohm. Show that the unit of $T=RC$ is the second.

In the circuit analysis we are almost always interested in the behavior of a particular network called the *response*. In general we give the name of *zero-input response* to the response of the circuit with no applied input

The RL (Resistor –Inductor) Circuit

The other typical first-order circuit is the RL circuit. We shall study its zero-input response. As shown in Fig. 6.5 for t<0, switch k_1 is on terminal B, k_2 is open, and the linear time-invariant inductor with inductance L is supplied with a constant current I_0. At t=0 switch k_1 is flipped to terminal C and k_2 is closed. Thus for t≥0 the inductor with initial current I_0 is connected to a linear time-invariant resistor with resistance R. The energy stored in the magnetic field as a result of I_0 in the inductance decreases gradually and dissipate in the resistor in the form of heat. The current in the RL loop decreases monotonically and eventually tends to zero.

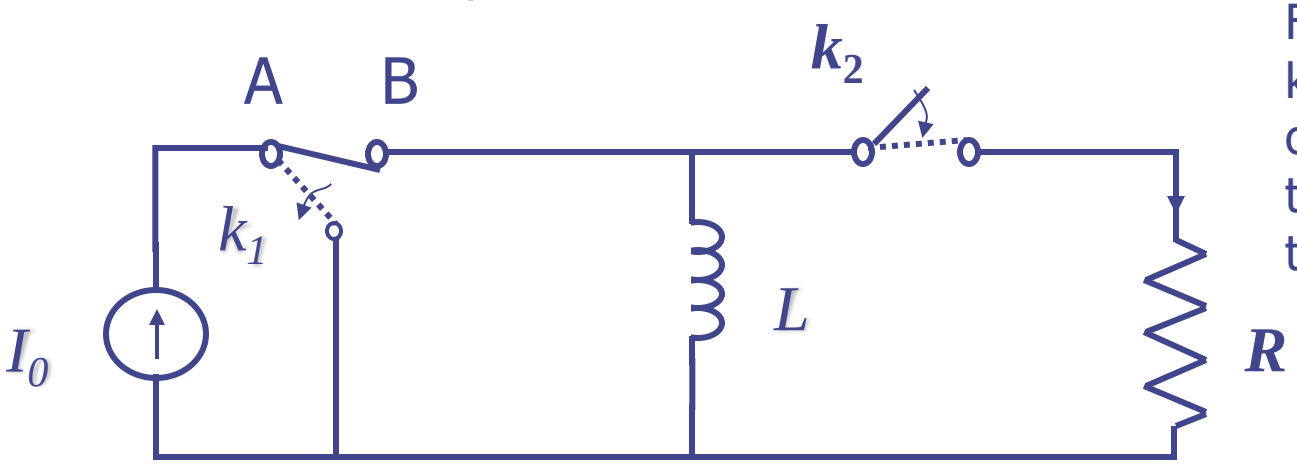

Fig. 6.5.for t<0, switch k_1 is on terminal B, k_2 is open; therefore for t<0, the current I_0 goes through the inductor L

In the same way as in RC case we redraw the RL circuit for $t \geq 0$ as shown in Fig.6.6. Note that the reference direction of all branch voltages and branch currents are clearly indicated. KCL says $i_R = -i_L$ and KVL states $v_L - v_R = 0$. Using the branch equations for both elements that is, $v_L = L(di_L/dt)$, $i_L(0) = I_0$, and $v_R = Ri_R$, we obtain the following differential equation in terms of the current i_L:

$$L\frac{di_L}{dt} + Ri_L = 0 \qquad t \geq 0 \qquad i_L(0) = I_0 \qquad (6.12)$$

This is a first-order linear homogeneous differential equation with constant coefficients; it has precisely the same form as the previous Eq.6.5. Therefore the solution is the same except notations

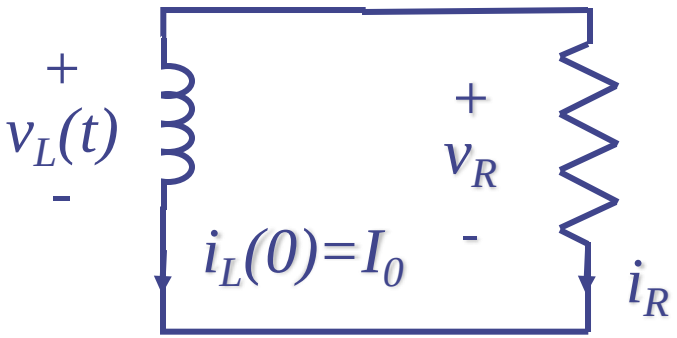

$$i_L(t) = I_0 e^{-\left(\frac{R}{L}\right)t} \qquad t \geq 0 \qquad (6.13)$$

where L/R=T is the time constant and s_0=-R/L is the natural frequency

Fig.6.6 An RL circuit with $i_L(0)=I_0$ and the waveforms for $t \geq 0$

The zero-input response as a function of the initial state

For the RC circuit and the RL circuit considered above, the zero-input responses are respectively

$$v(t) = V_0 e^{-\left(\frac{1}{RC}\right)t} \qquad i(t) = I_0 e^{-\left(\frac{R}{L}\right)t} \qquad t \geq 0 \tag{6.14}$$

The initial conditions are specified by V_0 and I_0, respectively. The numbers V_0 and I_0 are also called the *initial state* of the RC circuit and of the RL circuit, respectively. The following conclusion could be reached if we consider the way in which the waveform of the zero-input response depends on the initial state.

For first-order linear time invariant circuits, the zero-input response considered as a waveform defined for $0 \leq t < \infty$ is a linear function of the initial state

Let us prove this statement by considering the RC circuit. We wish to show that the waveform $v(\cdot)$ in Eq. (6.14) is a linear function of the initial state V_0. It is necessary to check the requirements of homogeneity and addittivity for the function.

Homogeneity is obvious; if the initial state is multiplied by a constant k, (Eq. (6.14)show that the whole waveform is multiplied by k. Adittivity as just as simple.

The zero input response corresponding to the initial state V_0' is

$$v'(t) = V_0' e^{-t/RC} \qquad t \geq 0$$

and the zero-input response corresponding to some other initial state V_0'' is

$$v''(t) = V_0'' e^{-t/RC} \qquad t \geq 0$$

Then the zero-input response corresponding to the initial state $V_0' + V_0''$

$$\left(V_0' + V_0''\right) e^{-t/RC} \qquad t \geq 0$$

This waveform is the sum of the two preceding waveforms. Hence addittivity holds.

Remark

This property does not hold in the case of nonlinear circuits. Consider the RC circuit shown in Fig. 6.7a. The capacitor is linear and time invariant and has a capacitance of 1 farad, and the resistor is nonlinear with characteristic

$$i_R = v_R^3$$

The two elements have the same voltage v, and expressing the branch currents in terms of v, we obtain from KCL

$$C\frac{dv}{dt} + i_R = \frac{dv}{dt} + v^3 = 0 \quad v(0) = V_0$$

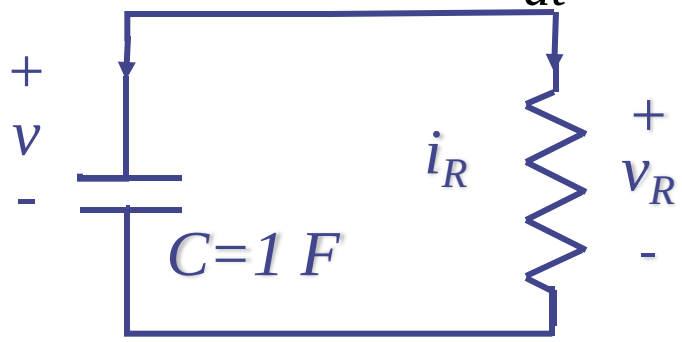

Fig.6.7a Nonlinear RC circuit and two of its zero-input resistance. The capacitor is linear and the resistor $i_R = v_R^3$

Hence

$$\frac{dv}{v^3} = -dt$$

If we integrate between 0 an t, the voltage takes the initial value V_0 and the final value v(t); hence

$$-\frac{1}{2[v(t)]^2}+\frac{1}{2V_0^2}=-t$$

or

$$v(t)=\frac{V_0}{\sqrt{1+2V_0^2 t}} \qquad t\geq 0 \tag{6.15}$$

This is the zero-input response of this nonlinear RC circuit starting from the initial state V_0 at time 0. The waveforms corresponding to $V_0=0.5$ and $V_0=2$ are plotted in Fig 6.7b.

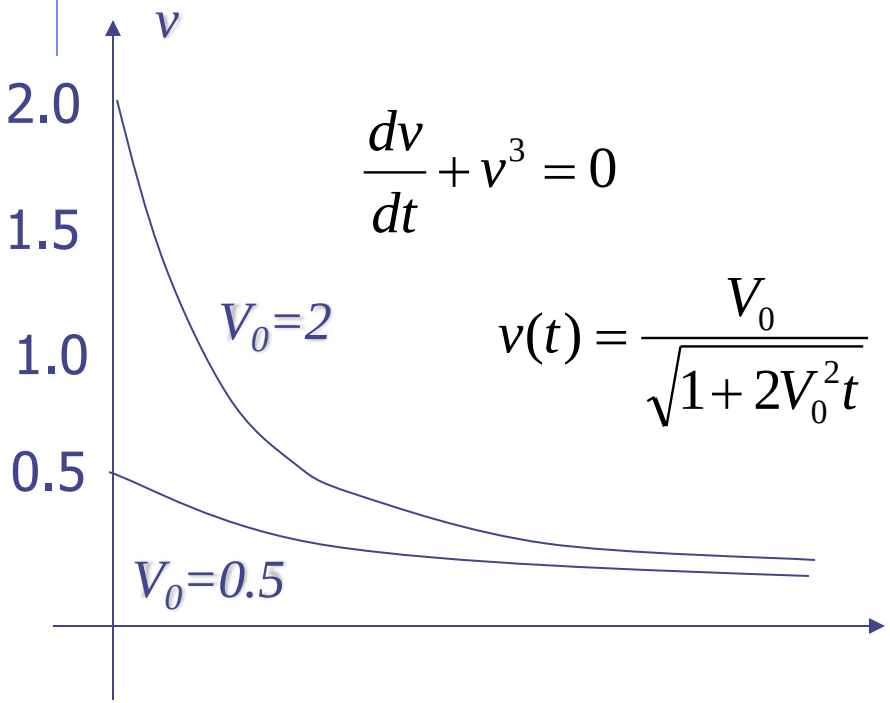

$$\frac{dv}{dt}+v^3=0$$

$$v(t)=\frac{V_0}{\sqrt{1+2V_0^2 t}}$$

It is obvious that the top curve ($V_0=2$) cannot be obtained from the lower one (for $V_0=0.5$) by multiplying its ordinates by 4.

Fig. 6.7b

Mechanical example

Let us consider a familiar mechanical system that has a behavior similar to that of the linear time invariant RC and RL circuits above.

Figure 6.8 shows a block of mass M moving at an initial velocity V_0 at $t=0$.

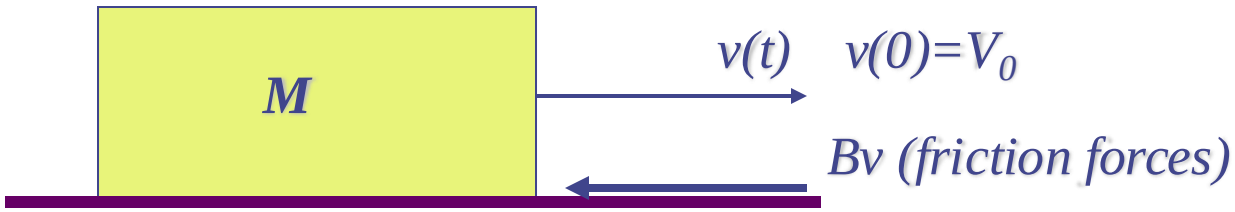

Fig. 6.8 A mechanical system which is described by a first order differential equation

As time proceeds, the block will slow down gradually because friction tends to oppose the motion. Friction is represented by friction forces that are all ways in the direction opposite to the velocity v, as shown in the figure. Let us assume that these forces are proportional to the magnitude of the velocity; thus, $f=Bv$, where the constant B is called the damping coefficient. From Newton's second law of motion we have, for $t \geq 0$,

$$M\frac{dv}{dt} = -Bv \qquad v(0) = V_0 \tag{6.16}$$

Therefore

$$v(t) = V_0 e^{-(B/M)t} \qquad t \geq 0 \tag{6.17}$$

where M/B represents the time constant for the mechanical system and $-B/M$ is the natural frequency

Zero-state Response

Constant Current Input

In the circuit of Fig. 6.9 a current source i_s is switched to a parallel linear time invariant RC circuit. For simplicity we consider first the case when the current i_s is constant and equal to I. Prior to the opening of the switch the current source produces a circulating current in the short circuit. At t =0, the switch is opened and thus the current source is connected the RC circuit. From KVL we see that the voltage across all three elements is the same. Let us design this voltage by v and assume that v is the response of interest. Writing the KCL equation in terms of v, we obtain the following network equation:

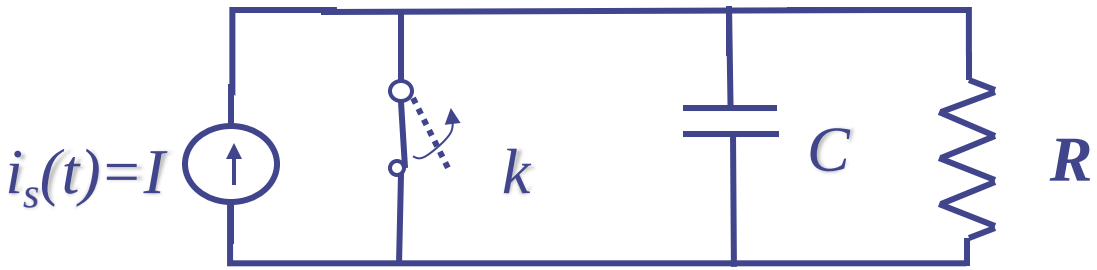

Fig.6.9 RC circuit with current source input. At t=0, switch k is opned

$$C\frac{dv}{dt}+\frac{1}{R}v=i_s(\mathrm{t})=I \quad t\geq 0 \tag{6.18}$$

where I is a constant. Let us assume that the capacitor is initially uncharged. Thus, the initial condition is

$$v(0)=0 \tag{6.19}$$

Before we solve Eqs. (6.18) and (6.19), let s figure out what will happen after we open the switch. At t=0+, that is, immediately after the opening of the switch, the voltage across the capacitor remains zero, because as we learned the voltage across a capacitor cannot jump abruptly unless there is an infinitely large current. At t=0+, since the voltage is still zero, the current in the resistor must be zero by Ohm's law. Therefore all the current from the source enters the capacitor at t=0+. Thus implies a rate of increase of the voltage specified by Eq.(6.19), thus

$$\left.\frac{dv}{dt}\right|_{0+}=\frac{I}{C} \tag{6.20}$$

As time proceeds, v increases, and v/R, the current through the resistor, increases also. Long after the switch is opened the capacitor is completely charged, and the voltage is practically constant. Then and thereafter, $dv/dt \approx 0$. All the current from the source goes through the resistor, and the capacitor behaves as an open circuit, that is

$$v \approx RI \tag{6.21}$$

This fact is clear form Eq.(6.18), and it is also shown in Fig.6.10. The circuit is said to have reached a steady state. It only remains to show how the whole change of voltage takes place. For that we rely on the following analytical treatment.

The solution of a linear no homogeneous differential equation can be written in the following form:

$$v = v_h + v_p \tag{6.22}$$

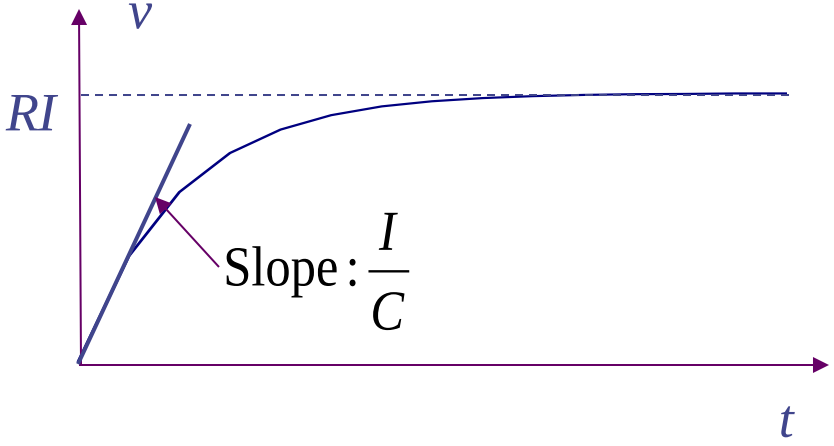

Fig. 6.10. Initial and final behavior of the voltage across the capacitor.

where v_h is a solution of the homogeneous differential equation and v_p is any particular solution of the nonhomogenous differential equation. v_p depends on the input.

The general solution of the homogeneous equation is of the form

$$v_h = K_1 e^{s_0 t} \qquad s_0 = -\frac{1}{RC} \tag{6.23}$$

where K_1 is any constant. The most convenient particular solution for a constant current input is a constant

$$v_p = RI \tag{6.24}$$

since the constant RI satisfies the differential equation (6.18). Substituting (6.23) and (6.24) in (6.22), we obtain the general solution of (6.18)

$$v(t) = K_1 e^{-(1/RC)t} + RI \qquad t \geq 0 \tag{6.25}$$

where K_1 is to be evaluated from the initial condition specified by Eq.(6.19). Setting t=0 in (6.25), we have

$$v(0) = K_1 + RI = 0$$

Thus,

$$K_1 = -RI \qquad (6.26)$$

The voltage as a function of time is then

$$v(t) = RI\left(1 - e^{-(1/RC)t}\right) \quad t \geq 0 \qquad (6.27)$$

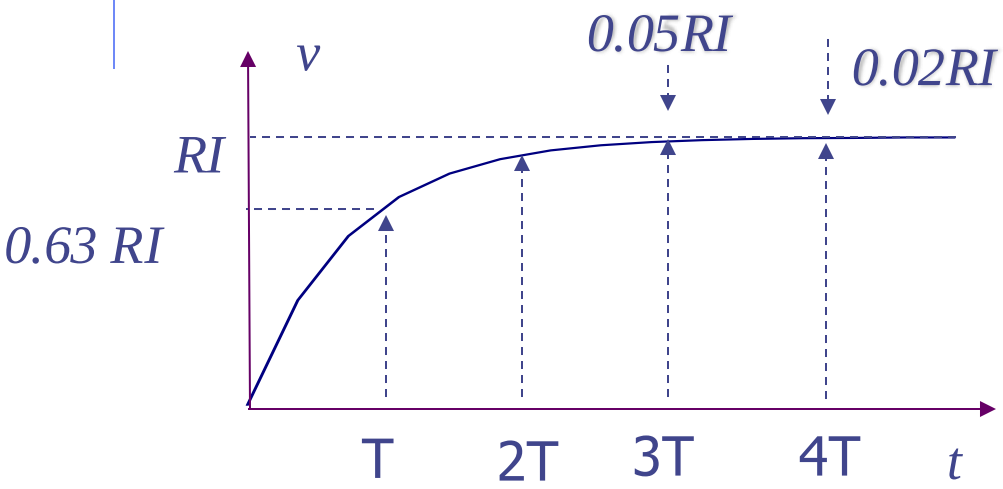

The graph in Fig.6.11 shows the voltage approaching its steady-state value exponentially. At about four times the time constant, the voltage is with two percent of its final value RI

Fig. 6.11. Voltage response for the *RC* circuit due to a constant source *I* as shown in Fig. 6.10 where *v=0*

Exercise 1

Sketch with appropriate scales the zero state response of the of Fig.6.10 with

a. I=200 mA, R=1 kΩ, and C=1μF

b. I=2 mA, R=50 Ω, and C=5 nF

Exercise 2

a. Calculate and sketch the waveforms $p_s(\cdot)$ (the power delivered by the source), $p_R(\cdot)$ (the power dissipated by the resistor) and $\mathcal{E}_C(\cdot)$, (the energy stored in the capacitor)

b. Calculate the efficiency of the process, i.e the ratio of the energy eventually stored in the capacitor to the energy delivered by the source $[\int_0^\infty p_s(t)dt]$

Sinusoidal Input

We consider now the same circuit but with a different input; the source is now given by a sinusoid

$$i_s(t) = A_1 \cos(\omega t + \phi_1) \qquad t \geq 0 \tag{6.28}$$

where the constant A_1 is called the *amplitude* of the sinusoids and the constant ω is called the (angular) *frequency*. The frequency is measure in radians per second. The constant ϕ_1 is called *phase.*

The solution of the homogeneous differential equation if of the same form (See Eq.(6.23)), since the circuit is the same except input. The most convenient particular solution of a linear differential equation with a constant coefficient for a sinusoidal input is a sinusoid of the same frequency. Thus v_p is taken to be of the form

$$v_p(t) = A_2 \cos(\omega t + \phi_2) \tag{6.29}$$

where A_2 and ϕ_2 are constants to be determined. To evaluate them , we substitute (6.29) in the given differential equation, namely

$$C\frac{dv_p}{dt}+\frac{1}{R}v_p = A_1\cos(\omega t+\phi_1) \qquad (6.30)$$

We obtain

$$-CA_2\omega\sin(\omega t+\phi_2)+\frac{1}{R}A_2\cos(\omega t+\phi_2) =$$

$$A_1\cos(\omega t+\phi_1) \quad \text{forall} \quad t\geq 0 \qquad (6.31)$$

Using standard trigonometric identities to express $\sin(\omega t+\phi_2), \cos(\omega t+\phi_2)$ and $\cos(\omega t+\phi_1)$ as a linear combination of $\cos\omega t$ and $\sin\omega t$, and equating separately the coefficients of $\cos\omega t$ and $\sin\omega t$ we obtain the following results:

$$A_2 = \frac{A_1}{\sqrt{(1/R)^2+(\omega C)^2}} \qquad (6.32)$$

and

$$\phi_2 = \phi_1 - \tan^{-1}\omega RC \qquad (6.33)$$

Here $tan^{-1}\omega RC$ denotes the angle between 0 and 90° whose tangent is equal to ωRC . This particular solution and the input current are plotted in Fig. 6.12.

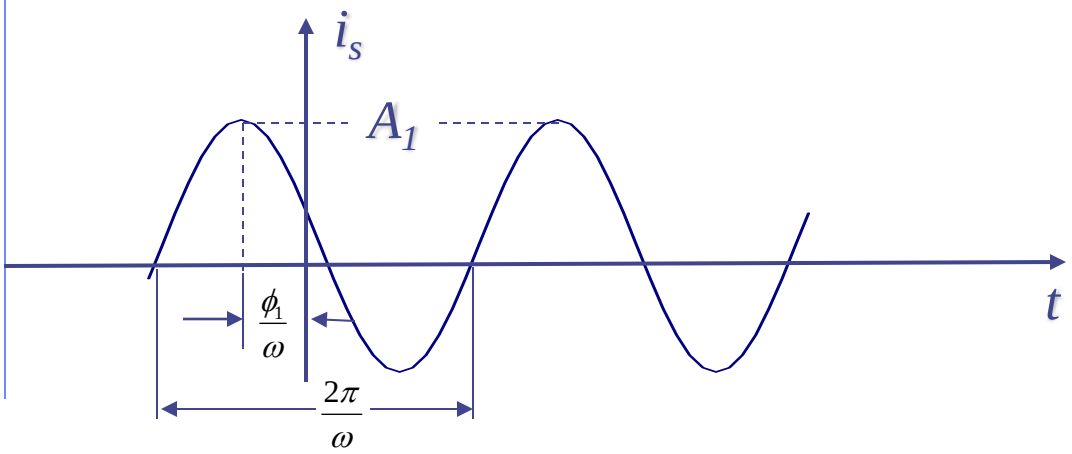

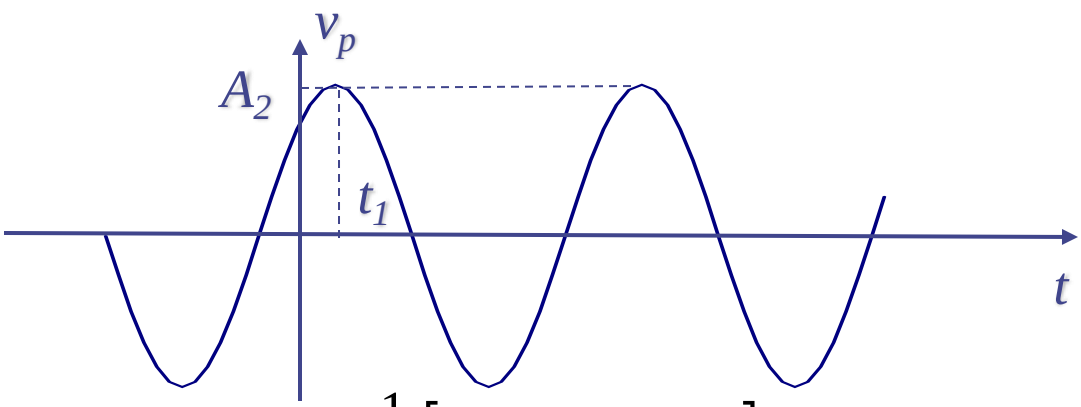

$$t_1 = \frac{1}{\omega}\left[\tan^{-1}\omega RC - \phi_1\right]$$

Fig.6.12 Input current and a particular solution for the output voltage of the RC circuit in Fig.6.9.

Exercise

Derive Eqs. (6.32) and (6.33) in detail.

The general solution of (6.31) is therefore of the form

$$v(t) = K_1 e^{-(1/RC)t} + A_2 \cos(\omega t + \phi_2) \quad t \geq 0 \tag{6.34}$$

Setting $t=0$, we have

$$v(0) = K_1 + A_2 \cos\phi_2 \tag{6.35}$$

that is

$$K_1 = -A_2 \cos\phi_2 \tag{6.36}$$

Therefore the response is given by

$$v(t) = -A_2 \cos\phi_2 e^{-(1/RC)t} + A_2 \cos(\omega t + \phi_2) \quad t \geq 0 \tag{6.37}$$

where A_2 and ϕ_2 are defined in Eqs.(6.32) and (6.33). The graph of v, that is the zero-state response to the input $A_1 \cos(\omega t + \phi_1)$, is plotted in Fig.6.13.

In the two cases treated in this lecture we considered the voltage v as the response and the current source i_s as the input. The initial condition in the circuit is zero; that is, the voltage across the capacitor is zero before the application of the input. In general we say that a circuit is in the zero state is all the initial conditions in the circuit are zero. The response of a circuit which starts from the zero state, is due exclusively to the input. By definition, the zero-state response is the response of a circuit to an input applied at some arbitrary time, say, t_0, subject to the condition that the circuit be in the zero state just prior to the application of the input (that is, at time t_0-).

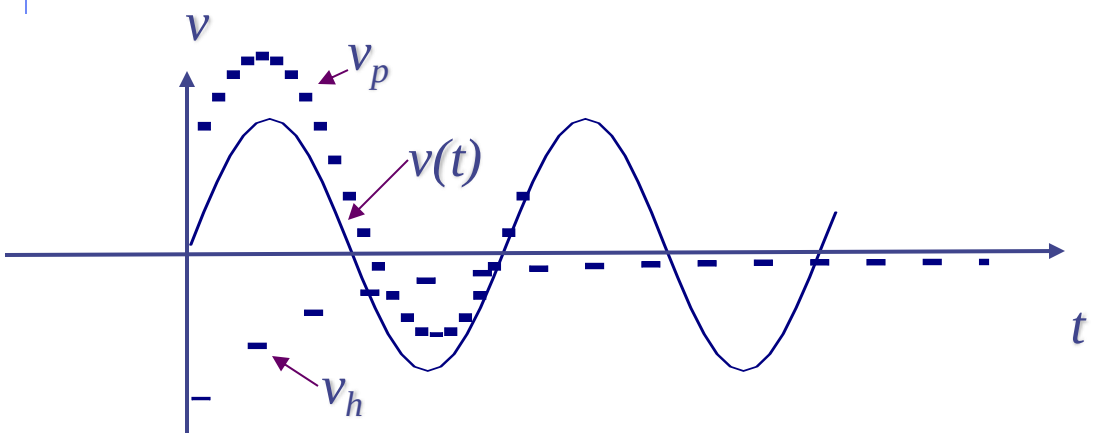

In calculating zero-state responses, our primary interest is the behavior of the response for $t \geq t_0$. It means that the input and the zero-state response are taken to be identically zero at $t < t_0$.

Fig.6.13. Voltage response of the circuit in Fig. 6.13 with $v(0)=0$ and $i_s(t)=A_1\cos(\omega t+\phi_1)$

Complete Response: Transient and Steady state

Complete response.

The response of the circuit to both an input and the initial conditions is called the complete response of the circuit. Thus the zero-input response and the zero-state response are special cases of the complete response.

Let us demonstrate that *for the simple linear RC circuit considered, the complete response is the sum of the zero-input response and the zero-state response.*

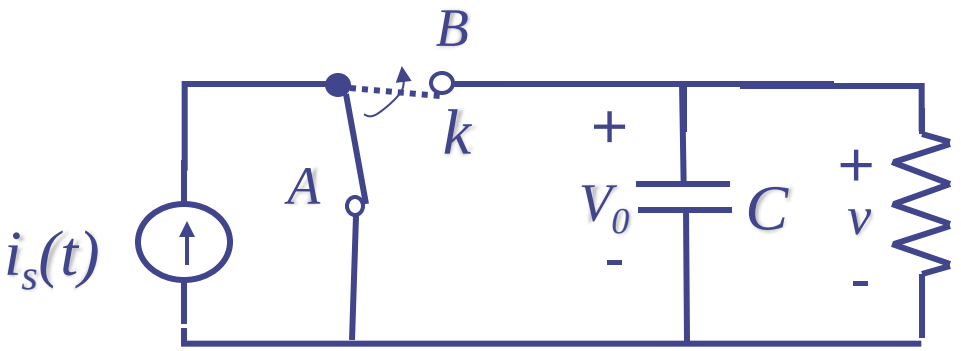

Consider the circuit in Fig. 6.14 where the capacitor is initially charged; that is $v(0)=V_0\neq 0$, and a current input is switched into the circuit at t=0.

Fig.6.14 RC circuit with $v(0)=V_0$ is excited by a current source $i_s(t)$. The switch k is flipped from A to B at $t=0$.

By definition, the complete response is the waveform $v(\cdot)$ caused by both the input and the initial $i_s(\cdot)$ state V_0.

$$C\frac{dv}{dt} + Gv = i_s(t) \qquad t \geq 0 \tag{6.38}$$

with

$$v(0) = V_0 \tag{6.39}$$

Where V_0 is the initial voltage of the capacitor. Let v_i be the zero-input response; by definition, it is the solution of

$$C\frac{dv_i}{dt} + Gv_i = 0 \qquad t \geq 0$$

with

$$v_i(0) = V_0$$

Let v_0 be the zero-state response; by definition, it is the solution of

$$C\frac{dv_0}{dt} + Gv_0 = i_s(\mathrm{t}) \qquad t \geq 0$$

with

$$v_0(0) = 0$$

From these four equations we obtain, by addition

$$C\frac{d}{dt}(v_i + v_0) + G(v_i + v_0) = i_s(t) \qquad t \geq 0$$

and

$$v_i(0) + v_0(0) = V_0$$

However these two equations show that the waveform $v_i(\cdot)+v_0(\cdot)$ satisfies both the required differential equation (6.38) and the initial condition (6.39). Since the solution of a differential equation such as (6.38), subject to initial conditions such as (6.39), is unique, it follows that the complete response v is given by

$$v(t) = v_i(t) + v_0(t) \qquad t \geq 0$$

that is, the complete response v is the sum of the zero-input response v_i and the zero-state response v_0.

Example

If we assume that the input is a constant current source applied at $t=0$, that is, $i_s=I$, the complete response of the current can be written immediately since we have already calculated the zero-input response and the zero-state response. Thus,

$$v(t) = v_i(t) + v_0(t) \qquad t \geq 0$$

From Eq.(6.8) we have

$$v_i(t) = V_0 e^{-\left(\frac{1}{RC}\right)t} \qquad t \geq 0$$

And from Eq.(6.27) we have

$$v_0(t) = RI\left(1 - e^{-(1/RC)t}\right) \qquad t \geq 0$$

Thus the complete response is

$$\underbrace{v(t)}_{\text{Complete response}} = \underbrace{V_0 e^{-(1/RC)t}}_{\text{Zero-input Response } v_i} + \underbrace{RI\left(1 - e^{-(1/RC)t}\right)}_{\text{Zero-state Response } v_0} \qquad t \geq 0 \qquad (6.40)$$

The responses are shown in Fig.(6.15)

Remark

We shall prove later that for the linear time invariant parallel RC circuit the complete response can be explicitly written in the following form for any arbitrary input i_s:

$$\underbrace{v(t)}_{\text{Complete response}} = \underbrace{V_0 e^{-(1/RC)t}}_{\text{Zero-input Response}} + \underbrace{\int_0^t \frac{1}{C} e^{-(t-t')/RC} i_s(t')dt'}_{\text{Zero-state Response}}$$

Exercise

By direct substitution show that the expression for the complete response given in the remark satisfies (6.38) and (6.39)

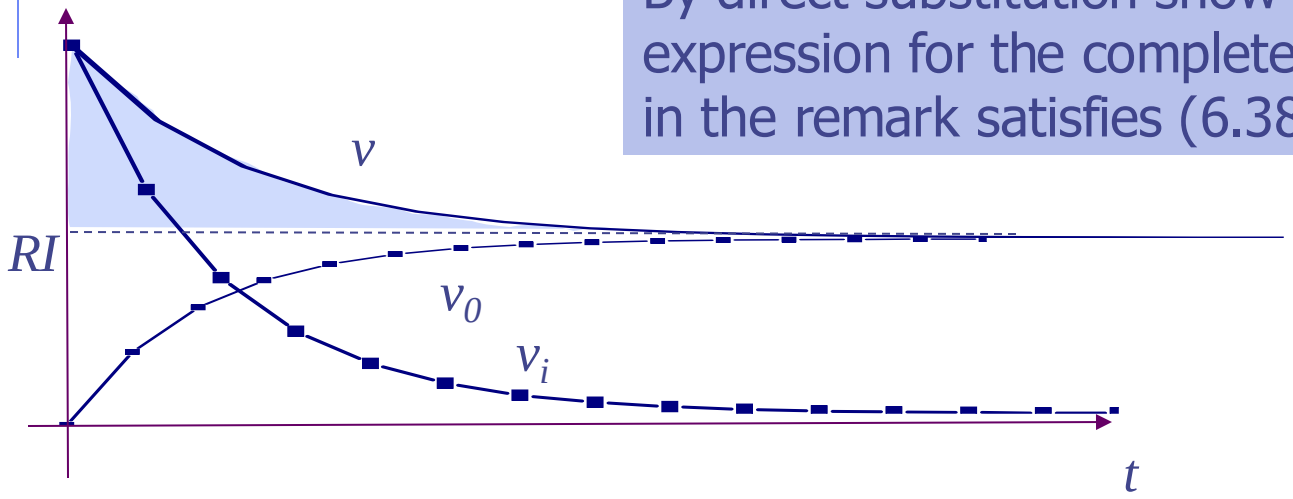

Fig.6.15 Zero-input, zero state and complete response of the simple *RC* circuit. The input is a constant current source *I* applied at *t=0*.

Transient and steady state.

In the previous example we can also partition the complete response in a different way. The complete response due to the initial state V_0 and the constant current input I in Eq.(6.40) 9s rewritten as follows

$$\underbrace{v(t)}_{\text{Complete response}} = \underbrace{\left(V_0 - RI\right)e^{-(1/RC)t}}_{\text{Transient}} + \underbrace{RI}_{\text{Steady state}} \qquad t \geq 0 \tag{6.41}$$

The first term is a decaying exponential as represented by the shaded area, i.e., the difference of the waveform $v(\cdot)$ and the constant RI in Fig.6.15. For very large t, the first term is negligible, and the second term dominates. For this reason we call the first term the *transient* and the second term the *steady state*. In this example it is evident that transient is contributed by both the zero-input response and the zero-state response, whereas the steady sate is contributed only by the zero-state response.

Physically, the transient is a result of two cases, namely, the initial conditions in the circuit and a sudden application of the input.

The steady state is a result of only the input and has a waveform closely related to that of the input. If the input, for example, is a constant, the steady state response is also a constant; if the input is a sinusoid of angular frequency ω, the steady state response is also a sinusoid of the same frequency. In the example of sinusoid inpput, the input is $i_s(t) = A_1 \cos(\omega t + \phi_1)$,the response has a steady state portion $A_2 \cos(\omega t + \phi_2)$ and a transient portion $-A_2 \cos\varphi_2 \exp((-1/RC)t)$

Exercise

The circuit shown in Fig. 6.16 contains 1-farad linear capacitor and a linear resistor with a negative resistance. When the current source is applied, it is in the zero state at time $t=0$, so that for $t \geq 0$, $i_s = I_m \cos \omega t$.

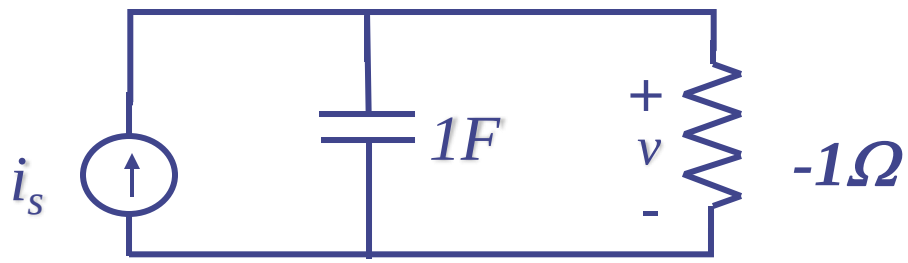

Calculate and sketch the response v.

Is there a sinusoidal steady state?

Fig.6.16 Exercise on steady state.

Circuits with Two Time Constants

Problems involving the calculation of transients occur frequently in circuits with switches. Let us illustrate such a problem with the circuit shown in Fig. 6.17. Assume that the capacitor and resistors are linear and time invariant, and that the capacitor is initially uncharged. For $t<0$ switch k_1 is closed and switch k_2 is open. Switch k_1 is opened at $t=0$ and thus connects the constant current source to the parallel RC circuit. The capacitor is gradually charged with the time constant $T_1=R_1C_1$. Suppose that $t=T_1$,switch k_2 is closed. The problem is to determine the voltage waveform across the capacitor for $t\geq 0$.

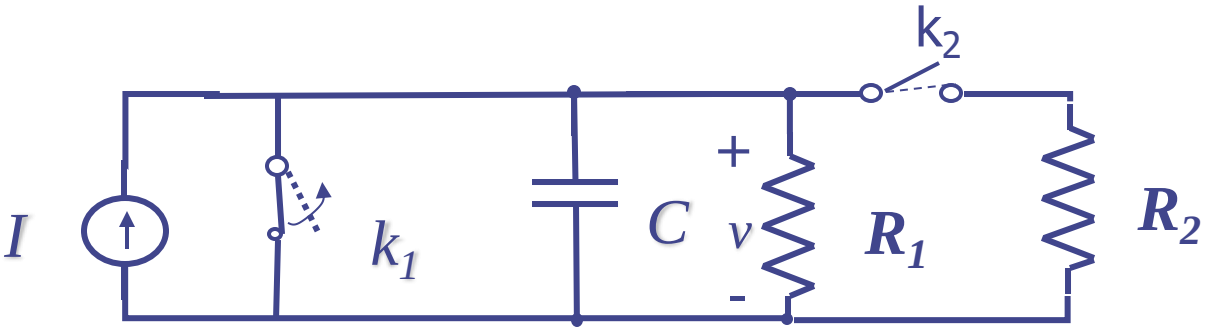

Fig.6.17 A simple transient problem. The switch k_1 is opened at $t=0$; the switch k_2 is closed at $t=T_1=R_1C_1$.

We can divide the problem into to parts, the interval $[0,T_1]$ and the interval $[T_1, \infty]$. First we determine the voltage in $[0,T_1]$ before switch k_2 closes.

Since $v(0)=0$ by assumption, the zero-state response can be found immediately. Thus,

$$v(t)=\begin{cases}0 & t\le 0\\ R_1 I(1-e^{-t/T_1}) & 0\le t\le T_1\end{cases} \qquad (6.42)$$

At $t=T_1$

$$v(T_1)=R_1 I\left(1-\frac{1}{e}\right) \qquad (6.43)$$

Which represents the initial condition for the second part of our problem. For $t>T_1$, since switch k_2 is closed we have a parallel combination of C, R_1 and R_2; the time constant is

$$T_2=C\left(\frac{R_1R_2}{R_1+R_2}\right) \qquad (6.44)$$

and the input is I. The complete response for this second part is, for $t\ge T_1$.

$$v(t)=R_1 I\left(1-\frac{1}{e}\right)e^{-(t-T_1)/T_2}+\frac{R_1R_2}{R_1+R_2}I(1-e^{-(t-T_1)/T_2}) \qquad t\ge T_1 \qquad (6.45)$$

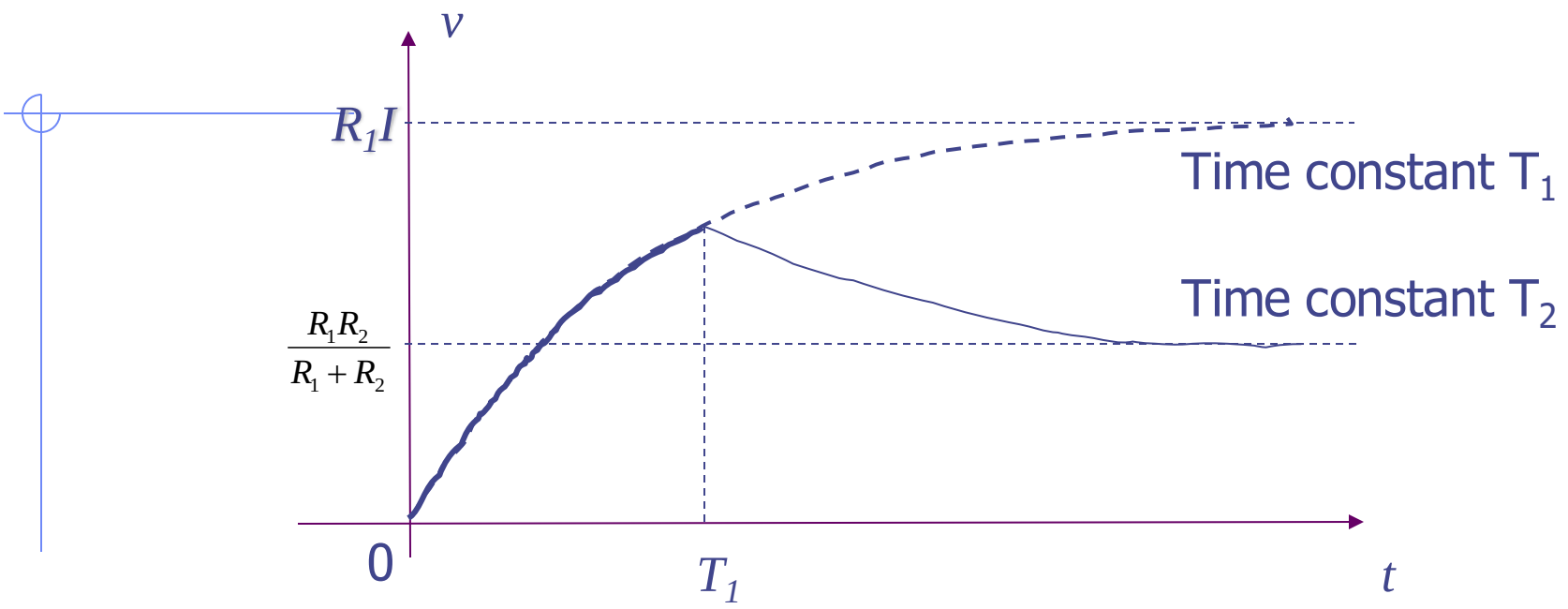

Fig.6.18 Waveform of voltage for the circuit in Fig.6.17.

RC Circuits

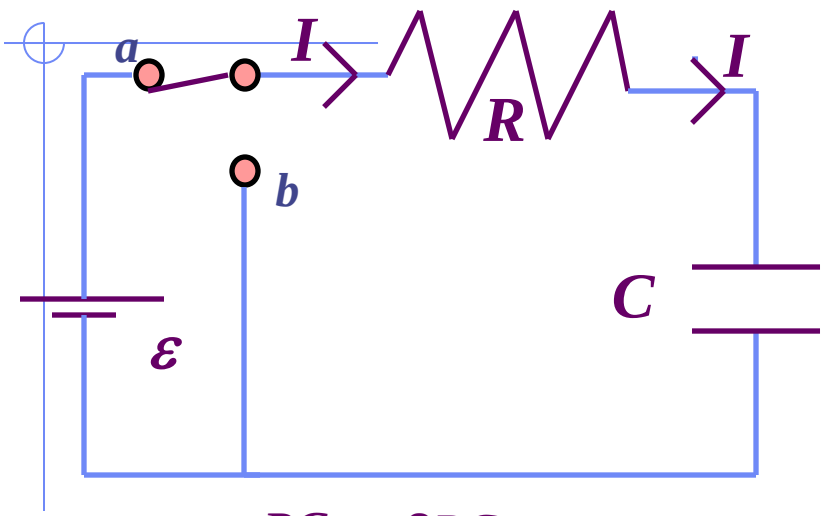
a
I
R
I
b
C
ε

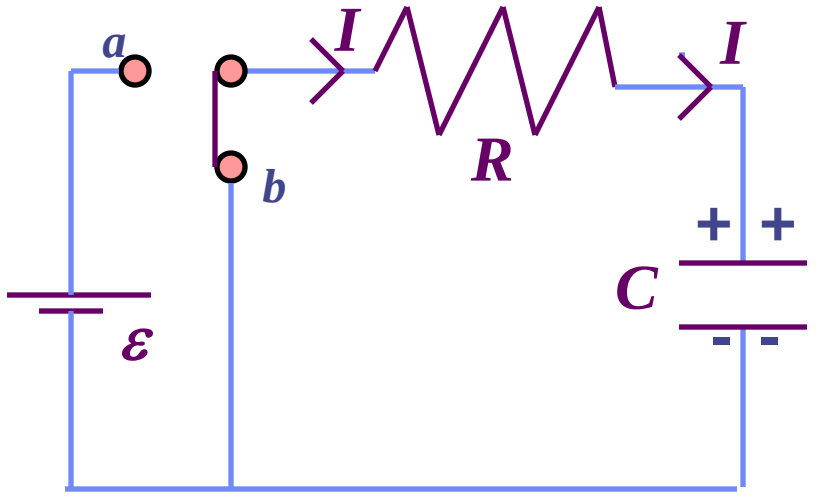
a
I
R
I
b
+ +
C
- -
ε

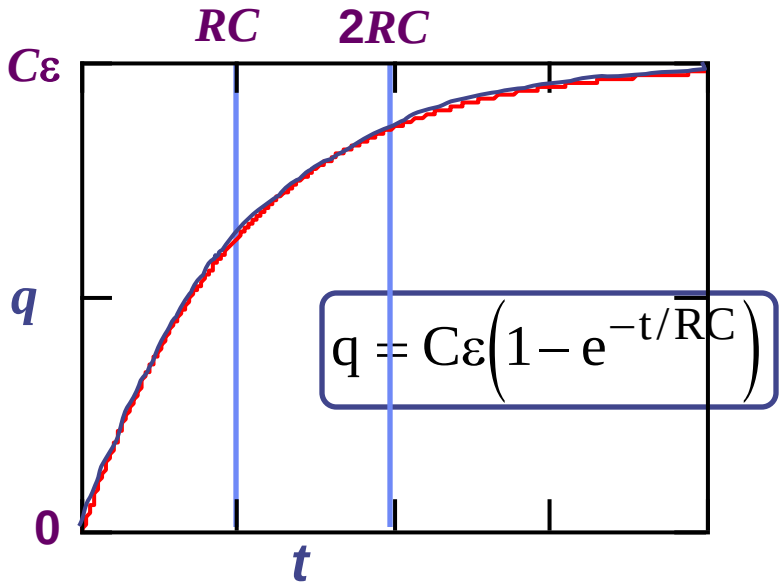
RC
2RC
Cε
q
0
t
$q = C\varepsilon\left(1 - e^{-t/RC}\right)$

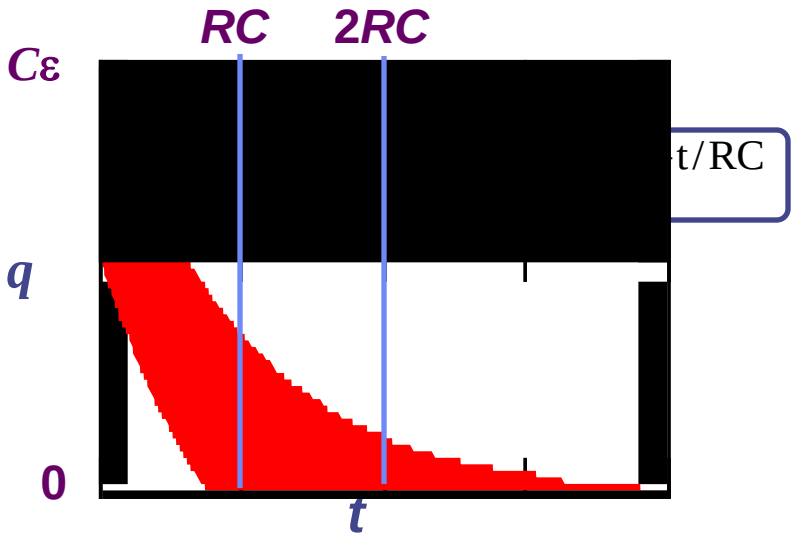
RC
2RC
Cε
q
0
t
t/RC

- **Calculate Charging of Capacitor through a Resistor**
- **Calculate Discharging of Capacitor through a Resistor**

Last time--Behavior of Capacitors

- **Charging**
  - **Initially, the capacitor behaves like a wire.**
  - **After a long time, the capacitor behaves like an open switch.**
- **Discharging**
  - **Initially, the capacitor behaves like a battery.**
  - **After a long time, the capacitor behaves like a wire.**

The capacitor is initially uncharged, and the two switches are open.

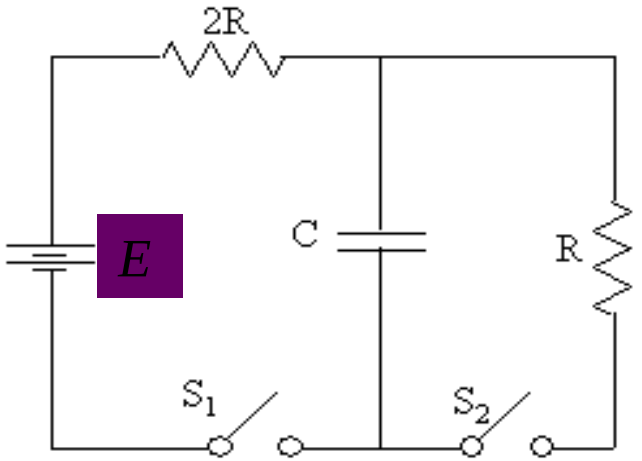

3) What is the voltage across the capacitor immediately after switch S_1 is closed?

a) $V_c = 0$ b) $V_c = E$

c) $V_c = 1/2\ E$

4) Find the voltage across the capacitor after the switch has been closed for a very long time.

a) $V_c = 0$ b) $V_c = E$

c) $V_c = 1/2\ E$

Initially: $Q = 0$ $V_C = 0$ $I = E/(2R)$

After a long time:

$V_C = E$ $Q = E\,C$ $I = 0$

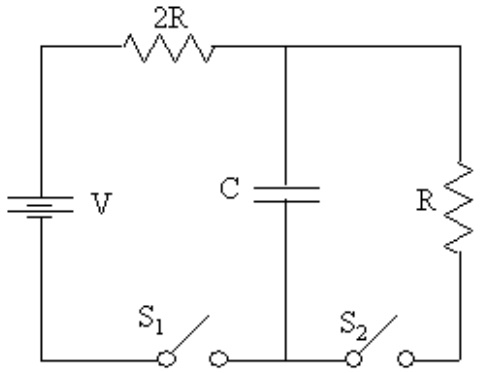

Preflight 11:

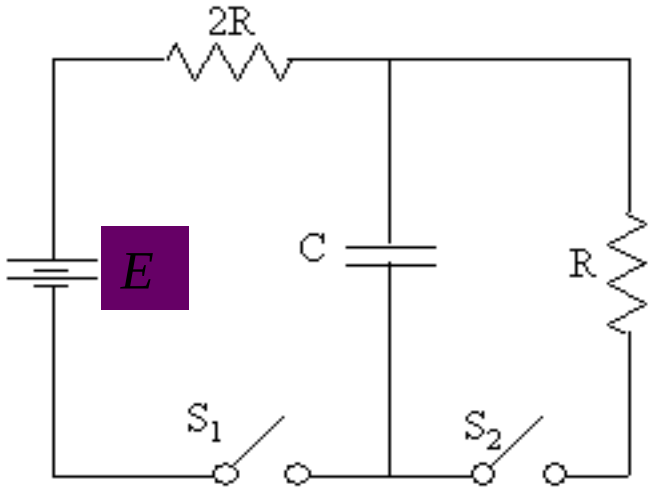

6) After being closed a long time, switch 1 is opened and switch 2 is closed. What is the current through the right resistor immediately after the switch 2 is closed?

a) $I_R = 0$

b) $I_R = E/(3R)$

c) $I_R = E/(2R)$

d) $I_R = E/R$

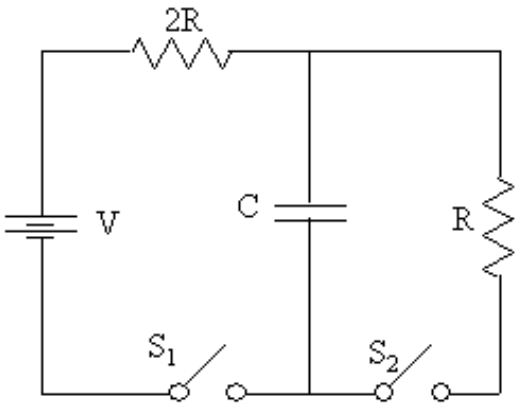

After C is fully charged, S1 is opened and S2 is closed. Now, the battery and the resistor 2R are disconnected from the circuit. So we now have a different circuit. Since C is fully charged, $V_C = E$. Initially, C acts like a battery, and $I = V_C/R$.

RC Circuits (Time-varying currents)

- **Charge capacitor:**

  C **initially uncharged; connect switch to** ***a*** **at** ***t*****=0**

  Calculate current and charge as function of time.

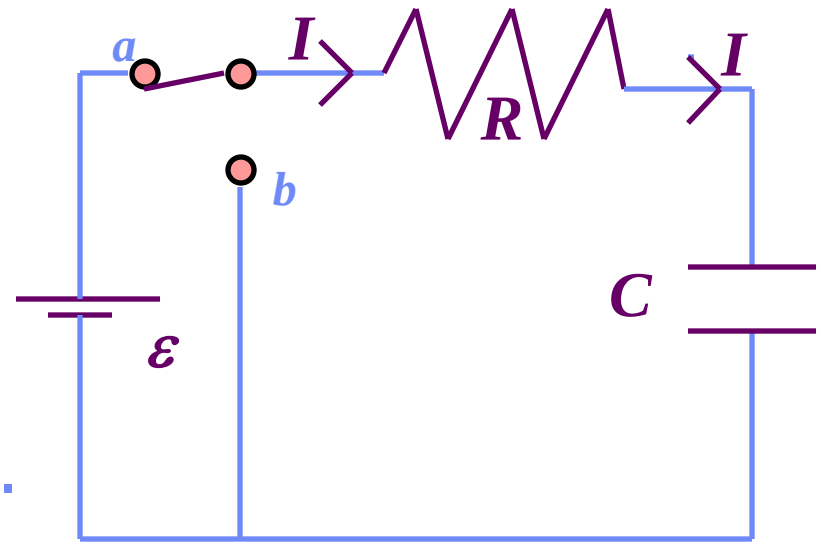

- **Loop theorem ⇒** $\varepsilon - IR - \frac{Q}{C} = 0$

Would it matter where *R* is placed in the loop??



- **Convert to differential equation for *Q*:**

$$I = \frac{dQ}{dt} \Rightarrow \boxed{\varepsilon = R\frac{dQ}{dt} + \frac{Q}{C}}$$

RC Circuits
(Time-varying currents)

- **Charge capacitor:**

$$\varepsilon = R\frac{dQ}{dt} + \frac{Q}{C}$$

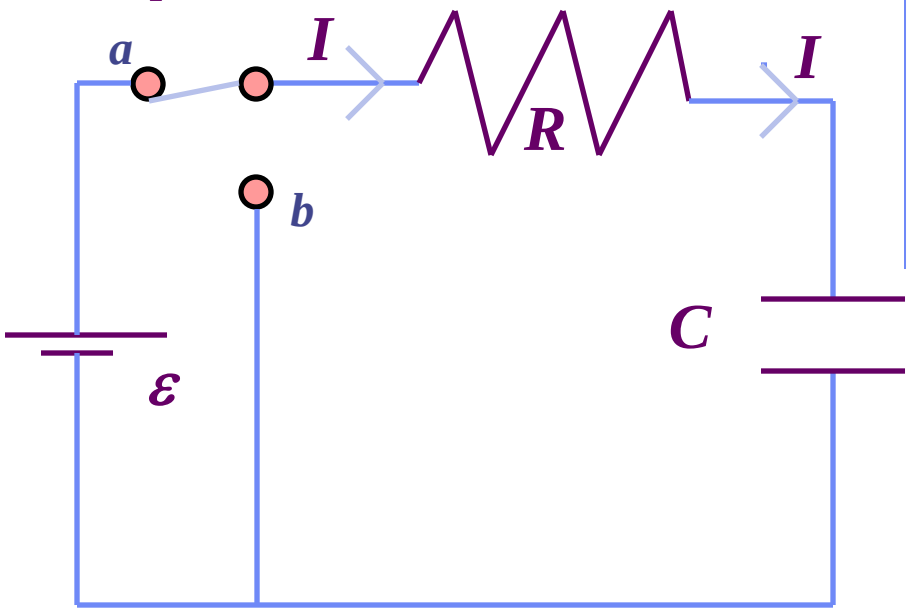

- **Guess solution:**

$$Q = C\varepsilon(1 - e^{-t/RC})$$

- **Check that it is a solution:**

$$\frac{dQ}{dt} = C\varepsilon e^{-t/RC}\left(-\frac{1}{RC}\right)$$

$$\Rightarrow \quad R\frac{dQ}{dt} + \frac{Q}{C} = -\varepsilon e^{-t/RC} + \varepsilon(1 - e^{-t/RC}) = \varepsilon \quad !$$

Note that this "guess" incorporates the boundary conditions:

$$t = 0 \Rightarrow Q = 0$$

$$t = \infty \Rightarrow Q = C\varepsilon$$

RC Circuits (Time-varying currents)

- **Charge capacitor:**

$$Q = C\varepsilon\left(1 - e^{-t/RC}\right)$$

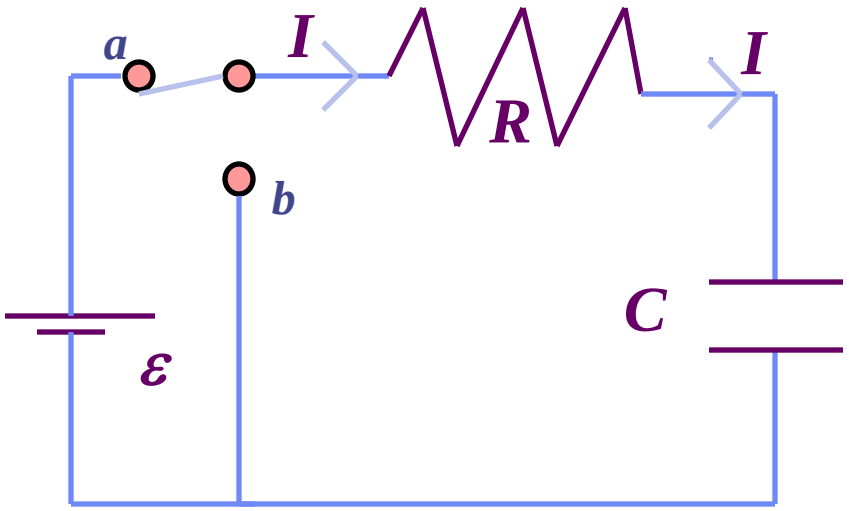

- **Current is found from differentiation:**

$$I = \frac{dQ}{dt} = \frac{\varepsilon}{R}e^{-t/RC}$$

$\Rightarrow$

Conclusion:

- Capacitor reaches its final charge($Q=C\varepsilon$) exponentially with time constant $\tau = RC$.
- Current decays from max ($=\varepsilon/R$) with same time constant.

Charging Capacitor

Charge on C

$$Q = C\varepsilon\left(1 - e^{-t/RC}\right)$$

Max = $C\varepsilon$

63% Max at $t=RC$

Current

$$I = \frac{dQ}{dt} = \frac{\varepsilon}{R}e^{-t/RC}$$

Max = ε/R

37% Max at $t=RC$

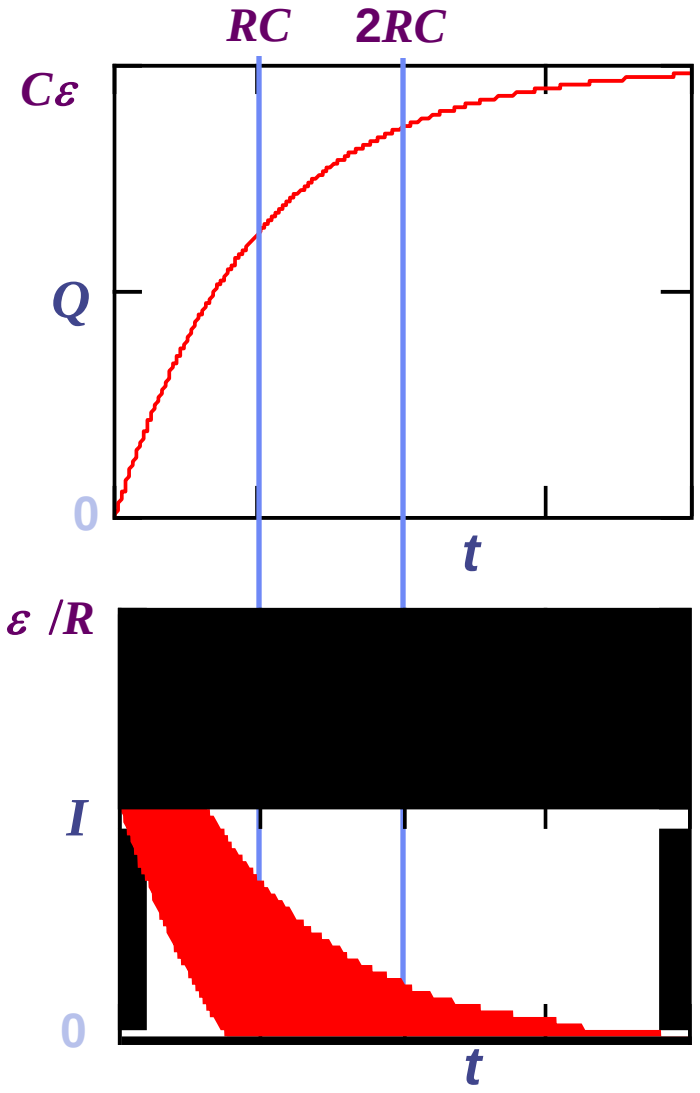

- At t=0 the switch is thrown from position b to position a in the circuit shown: The capacitor is initially uncharged.
  - At time $t=t_1=\tau$, the charge Q_1 on the capacitor is (1-1/e) of its asymptotic charge $Q_f=C\varepsilon$.
  - What is the relation between Q_1 and Q_2 , the charge on the capacitor at time $t=t_2=2\tau$?

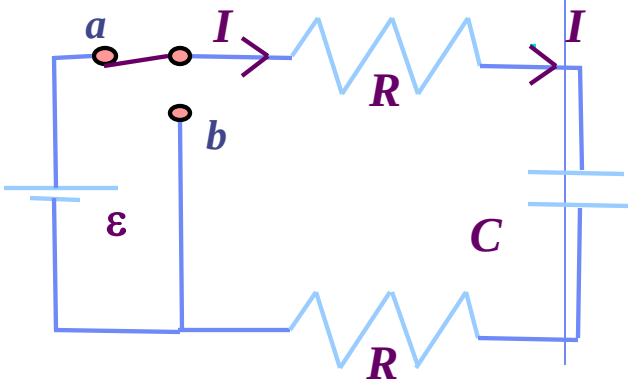

(a) $Q_2 < 2Q_1$ (b) $Q_2 = 2Q_1$ (c) $Q_2 > 2Q_1$

- The point of this ACT is to test your understanding of the exact time dependence of the charging of the capacitor.
- Charge increases according to:

$$Q = C\varepsilon(1-e^{-t/2RC})$$

- So the question is: how does this charge increase differ from a linear increase?
- From the graph at the right, it is clear that the charge increase is not as fast as linear.
- In fact the rate of increase is just proportional to the current (dQ/dt) which decreases with time.
- Therefore, $Q_2 < 2Q_1$.

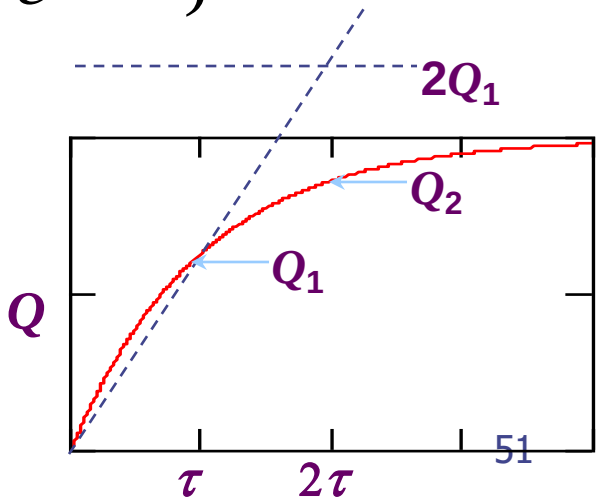

RC Circuits
(Time-varying currents)

- **Discharge capacitor:**

  C **initially charged with** $Q=C\varepsilon$

  Connect switch to *b* at *t*=0.

  Calculate current and charge as function of time.

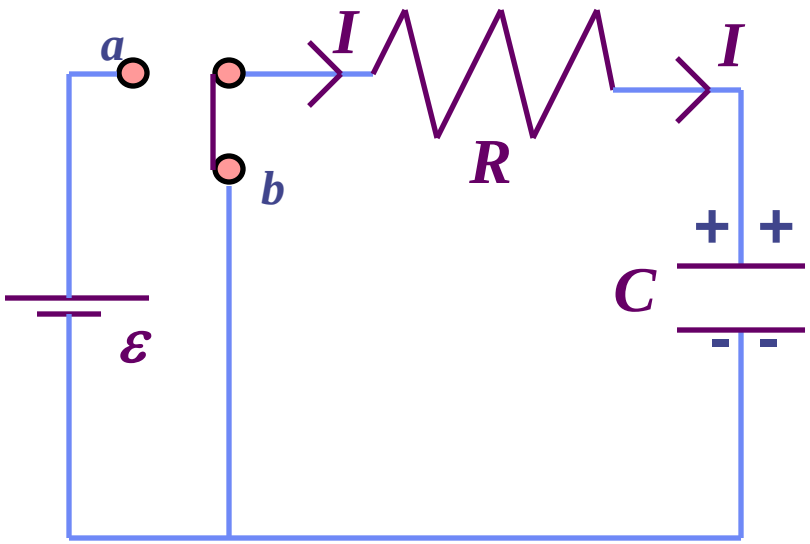

- **Loop theorem** $\Rightarrow$ $$IR+\frac{Q}{C}=0$$

- **Convert to differential equation for *Q*:**

$$I=\frac{dQ}{dt} \Rightarrow \boxed{R\frac{dQ}{dt}+\frac{Q}{C}=0}$$

RC Circuits
(Time-varying currents)

- **Discharge capacitor:**

$$R\frac{dQ}{dt}+\frac{Q}{C}=0$$

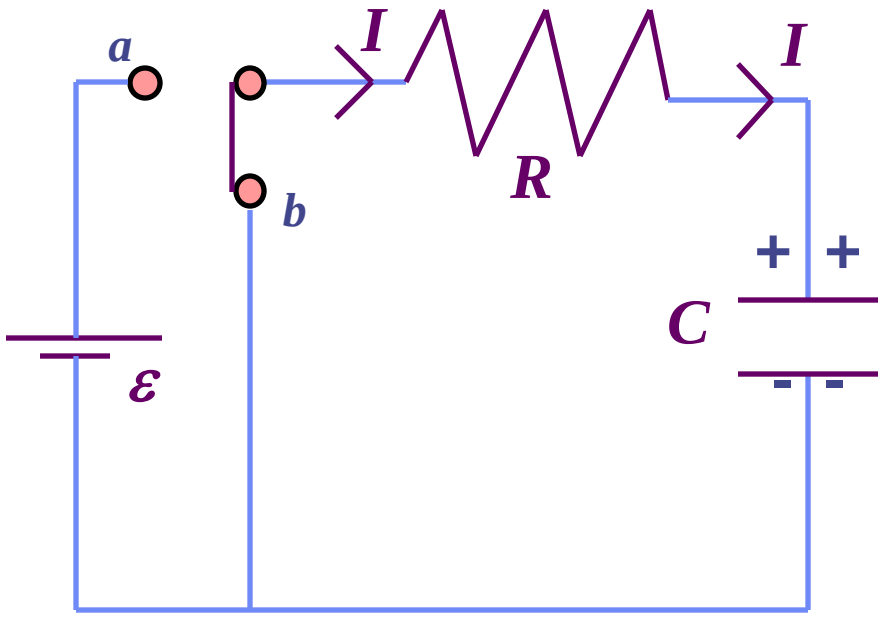

- **Guess solution:**

- **Check that it is a solution:**

$$\frac{dQ}{dt}=C\varepsilon e^{-t/RC}\left(-\frac{1}{RC}\right)$$

$$\Rightarrow R\frac{dQ}{dt}+\frac{Q}{C}=-\varepsilon e^{-t/RC}+\varepsilon e^{-t/RC}=0\ !$$

Note that this "guess" incorporates the boundary conditions:

$$t=0\Rightarrow Q=C\varepsilon$$

$$t=\infty\Rightarrow Q=0$$

RC Circuits
(Time-varying currents)

- **Discharge capacitor:**

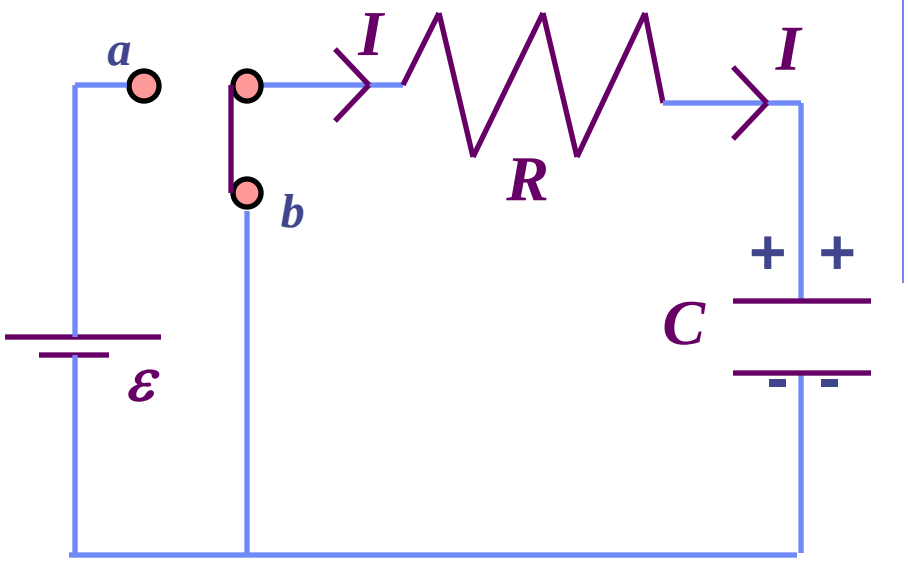

- **Current is found from differentiation:**

$$I = \frac{dQ}{dt} = -\frac{\varepsilon}{R} e^{-t/RC}$$

$\Rightarrow$

Minus sign: original definition of current "I" direction

Conclusion:

- **Capacitor discharges exponentially with time constant $\tau = RC$**
- **Current decays from initial max value (= $-\varepsilon/R$) with same time constant**

Discharging Capacitor

Charge on C

Max = $C\varepsilon$

37% Max at $t=RC$

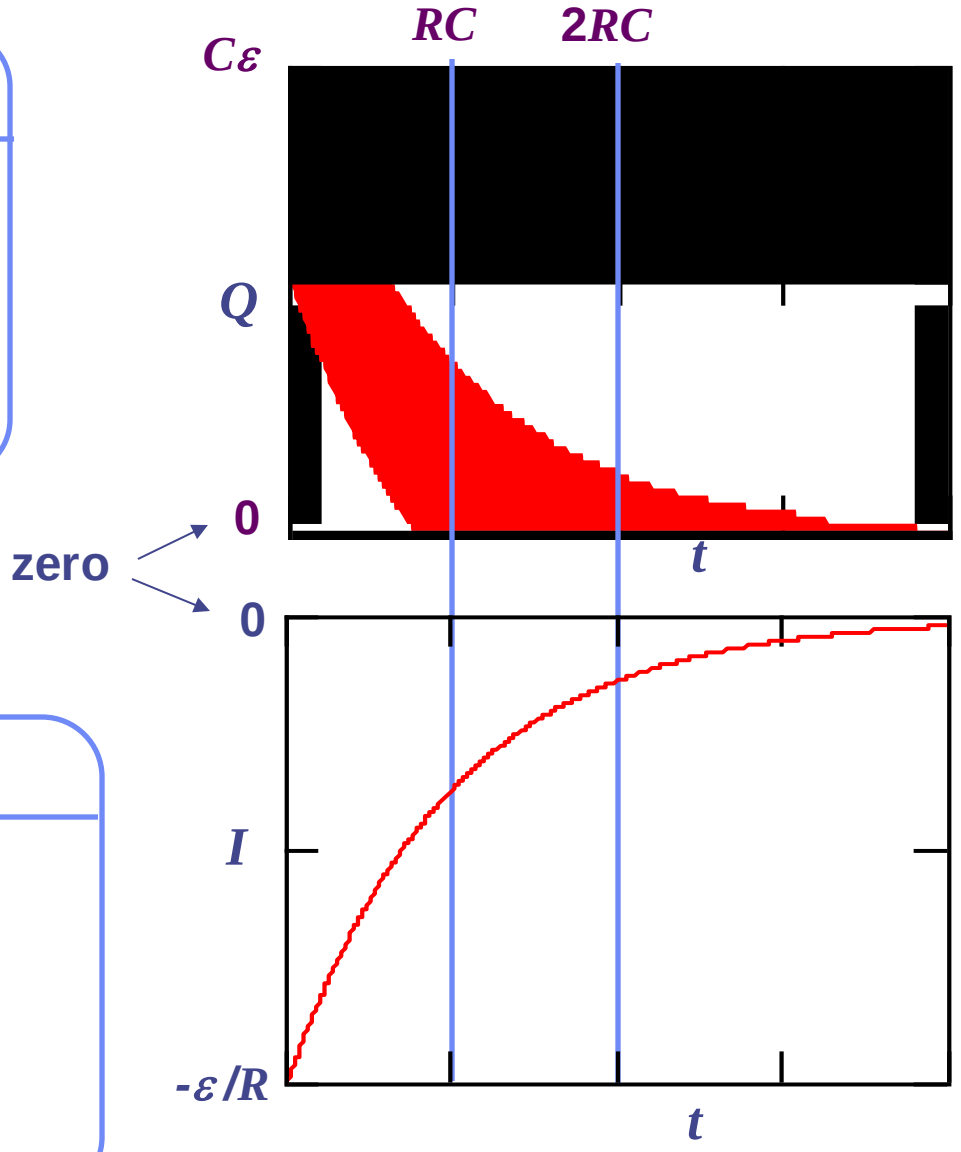

Current

$$I = \frac{dQ}{dt} = -\frac{\varepsilon}{R} e^{-t/RC}$$

Max = $-\varepsilon/R$

37% Max at $t=RC$

The two circuits shown below contain identical fully charged capacitors at *t=0*. Circuit 2 has twice as much resistance as circuit 1.

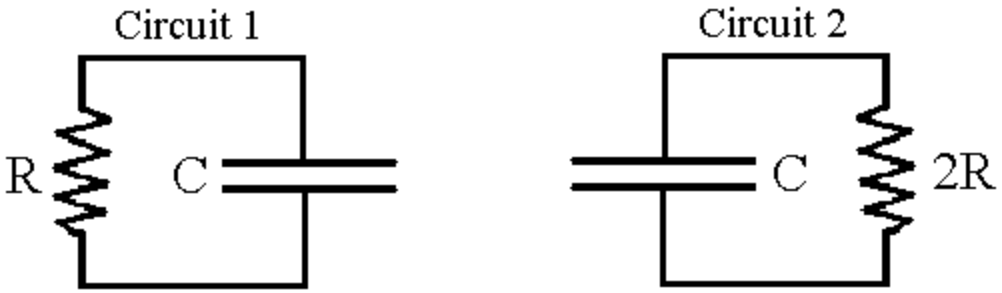

8) Compare the charge on the two capacitors a short time after $t = 0$

a) $Q_1 > Q_2$

b) $Q_1 = Q_2$

c) $Q_1 < Q_2$

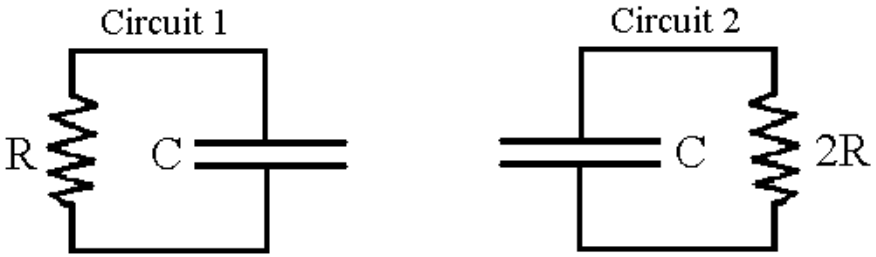

Initially, the charges on the two capacitors are the same. But the two circuits have different time constants:

$\tau_1 = RC$ and $\tau_2 = 2RC$. Since $\tau_2 > \tau_1$ it takes circuit 2 longer to discharge its capacitor. Therefore, at any given time, the charge on capacitor is bigger than that on capacitor 1.

- At t=0 the switch is connected to position a in the circuit shown: The capacitor is initially uncharged.
  - At $t = t_0$, the switch is thrown from position a to position b.
  - Which of the following graphs best represents the time dependence of the charge on C?

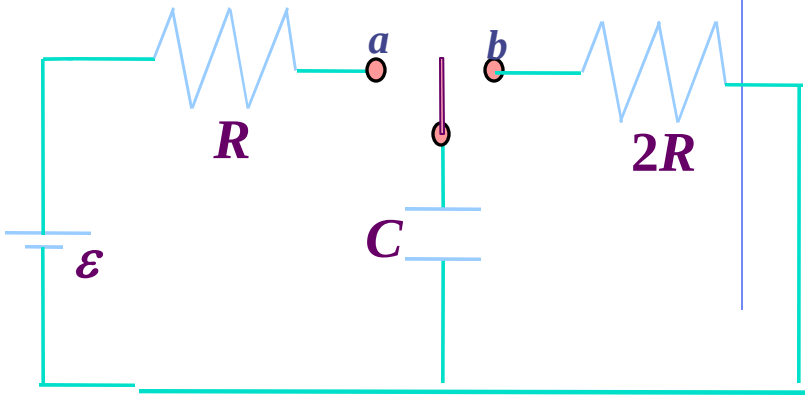

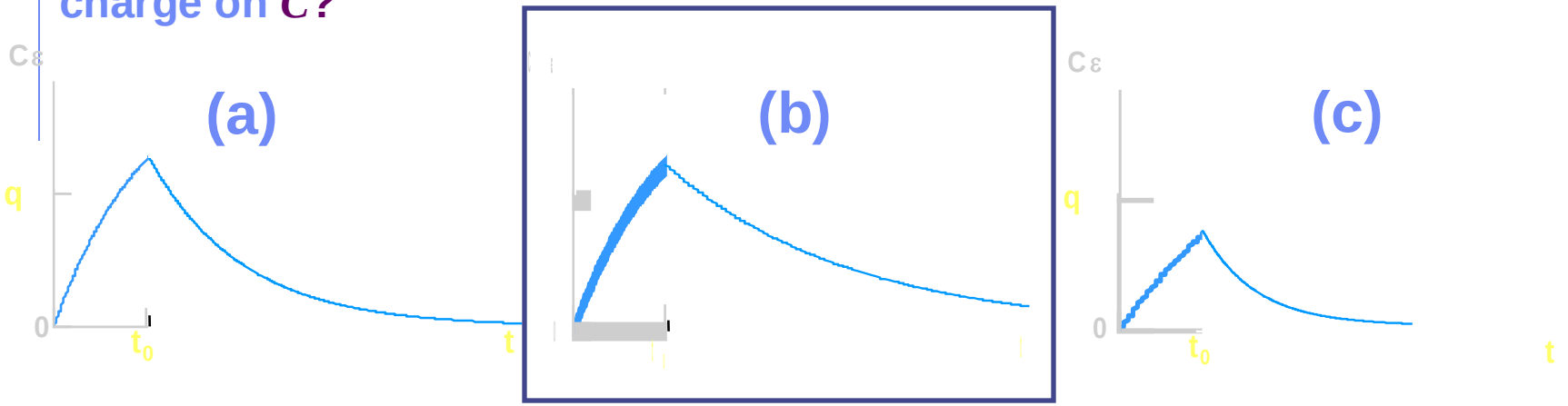

- For $0 < t < t_0$, the capacitor is charging with time constant $\tau = RC$
- For $t > t_0$, the capacitor is discharging with time constant $\tau = 2RC$
  - (a) has equal charging and discharging time constants
  - (b) has a larger discharging t than a charging τ
  - (c) has a smaller discharging t than a charging τ

Charging

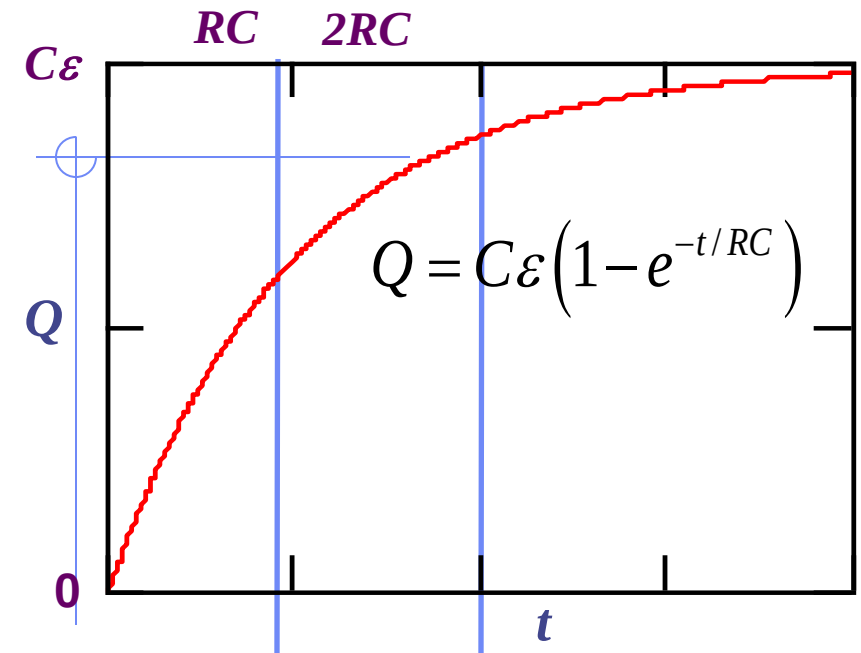

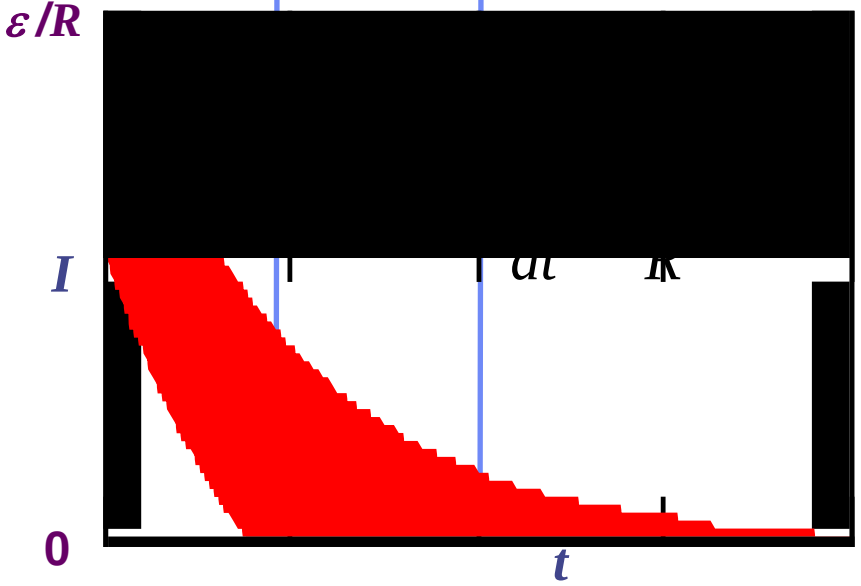

Discharging

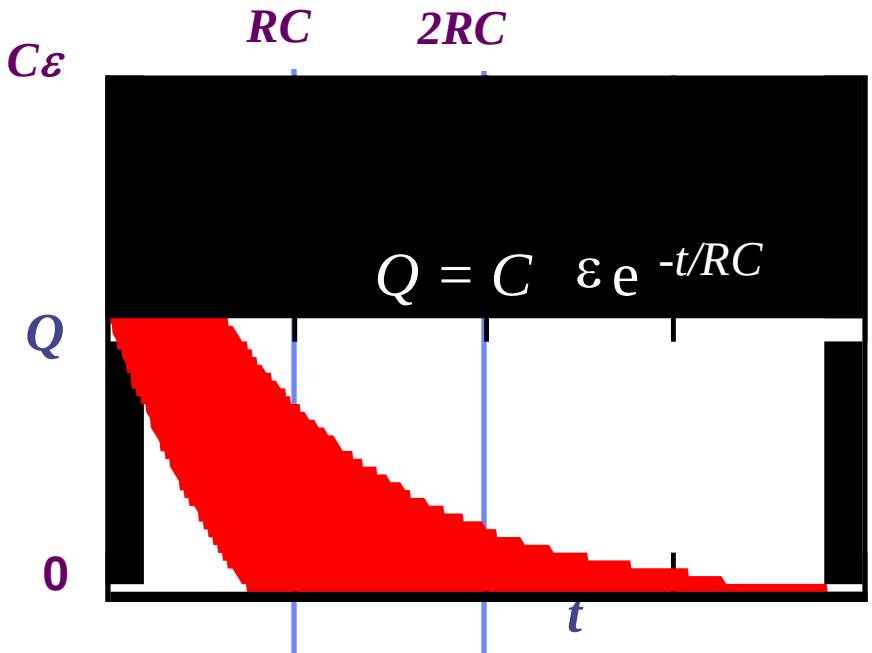

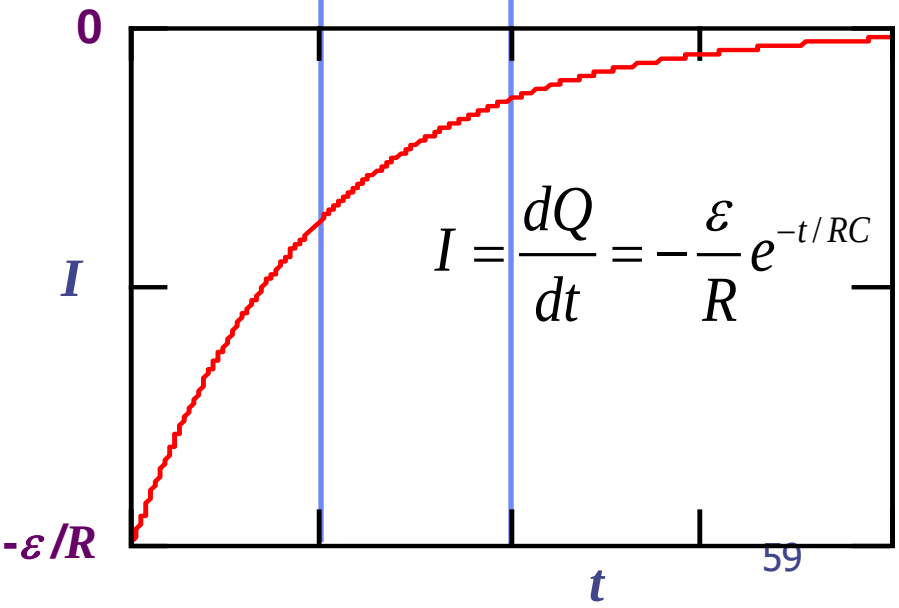

A very interesting RC circuit

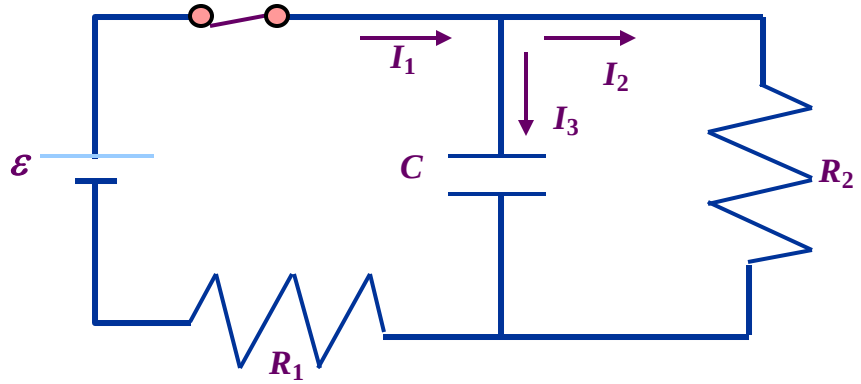

First consider the short and long term behavior of this circuit.

- **Short term behavior:**

  Initially the capacitor acts like an ideal wire. Hence,

  and

- **Long term behavior:**

  Exercise for the student!!

The circuit below contains a battery, a switch, a capacitor and two resistors

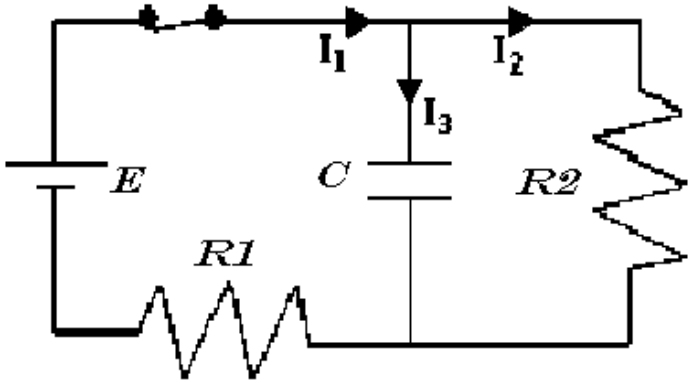

10) Find the current through R_1 after the switch has been closed for a long time.

a) $I_1 = 0$ b) $I_1 = E/R_1$ c) $I_1 = E/(R_1 + R_2)$

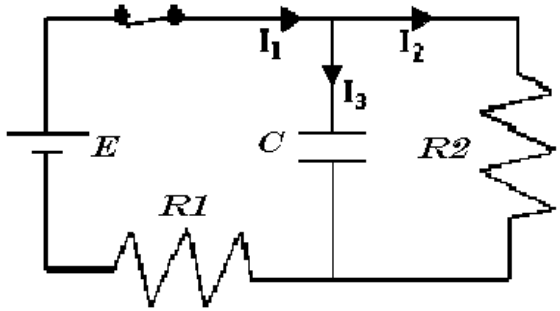

After the switch is closed for a long time …..

The capacitor will be fully charged, and $I_3 = 0$.
(The capacitor acts like an open switch).

So, $\boldsymbol{I_1 = I_2}$, and we have a one-loop circuit with two resistors in series,
hence $\boldsymbol{I_1 = E/(R_1+R_2)}$

What is voltage across C after a long time? $\boldsymbol{C}$ is in parallel with R_2 !!

$$\boldsymbol{V_C = I_1 R_2 = E\, R_2/(R_1+R_2) < E}$$

Very interesting RC circuit *continued*

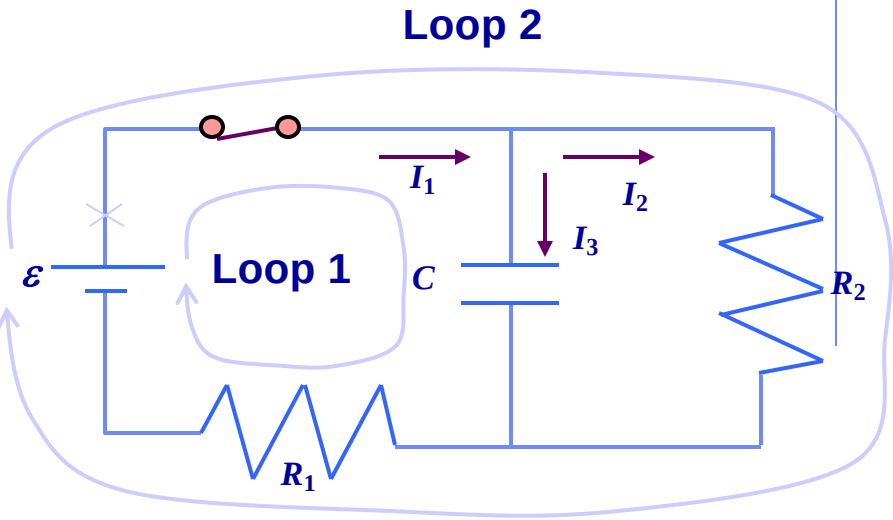

- **Loop 1:** $\varepsilon - \frac{Q}{C} - I_1 R_1 = 0$
- **Loop 2:** $\varepsilon - I_2 R_2 - I_1 R_1 = 0$
- **Node:** $I_1 = I_2 + I_3$
- **Eliminate I_1 in L_1 and L_2 using Node equation:**
- **Loop 1:** $\varepsilon - \frac{Q}{C} - R_1\left(\frac{dQ}{dt} + I_2\right) = 0$
- **Loop 2:** $\varepsilon - I_2 R_2 - R_1\left(\frac{dQ}{dt} + I_2\right) = 0$

eliminate I_2 from this

- **Final differential eqn:** $\frac{\varepsilon}{R_1} = \frac{dQ}{dt} + \frac{Q}{\left(\frac{R_1 R_2}{R_1 + R_2}\right) C}$

Very interesting RC circuit *continued*

- **Final differential eqn:**

$$\frac{dQ}{dt} + \frac{Q}{\left(\frac{R_1 R_2}{R_1 + R_2}\right)C} = \frac{\varepsilon}{R_1}$$

time constant: τ *parallel combination of* R_1 *and* R_2

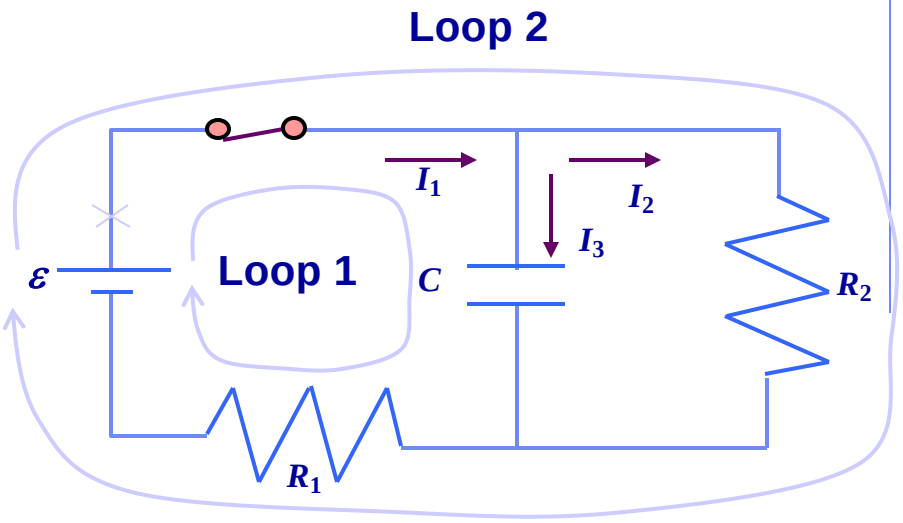

- **Try solution of the form:** $Q(t) = A\left(1 - e^{-t/\tau}\right)$
  - and plug into ODE to get parameters A and τ

- **Obtain results that agree with initial and final conditions:**

$$A = C\varepsilon\left(\frac{R_2}{R_1 + R_2}\right) \qquad \tau = \left(\frac{R_1 R_2}{R_1 + R_2}\right)C$$

Very interesting RC circuit *continued*

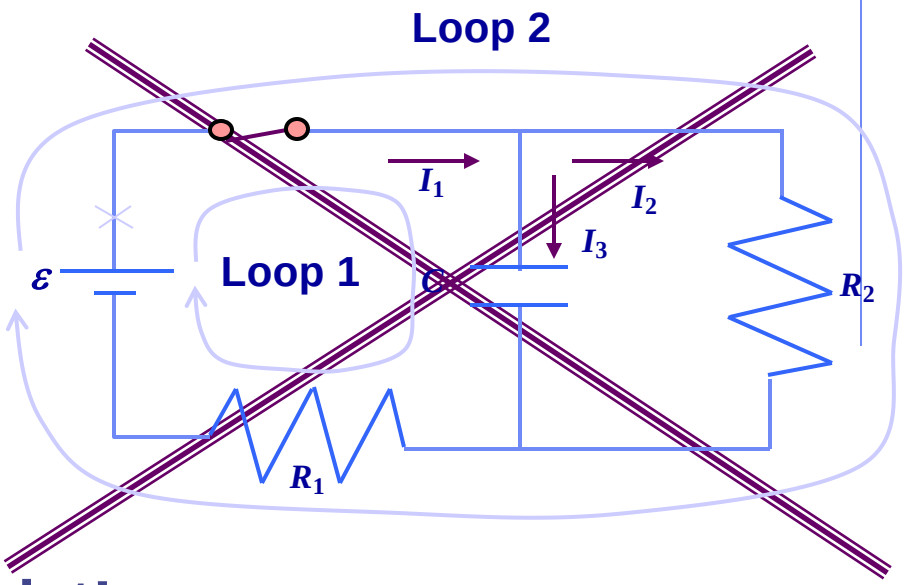

- What about discharging?
  - Open the switch...

- Loop 1 and Loop 2 do not exist!
- I_2 is only current
- only one loop
  - start at ***x*** marks the spot...

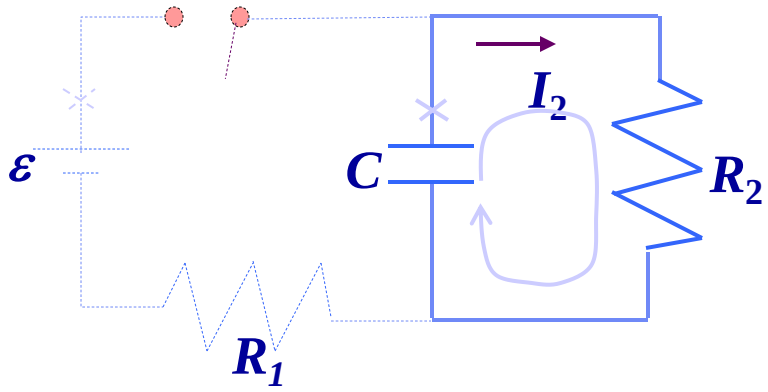

$$-I_2R_2 + \frac{Q}{C} = 0 \qquad but \qquad I_2 = -\frac{dQ}{dt}$$

Different time constant for discharging

- **Kirchoff's Laws apply to time dependent circuits** ***they give differential equations!***
- **Exponential solutions**
  - **from form of differential equation**
- **time constant** $\tau = RC$
  - **what** R**, what** C**?? You must analyze the problem!**
- **series** RC **charging solution** $Q = C\varepsilon\left(1 - e^{-t/RC}\right)$
- **series** RC **discharging solution** $Q = C\ \varepsilon\, e^{-t/RC}$

Lecture 7

- **First order Circuits (ii).**
- The linearity of the zero- state response
- Linearity and time invariance.
- Step response.
- The time invariance property.
- The shift operator.
- Impulse response.
- Step and impulse response for simple circuits.
- Time varying circuits and nonlinear circuits.

Linearity of the Zero-state Response

The zero-state response of any linear circuit is a linear function of the input; that is, the dependence of the waveform of the zero-state response on the input waveform is expressed by linear function.

Any independent source in a linear circuit is considered as an input.

Let illustrate this fact with the linear time-invariant RC circuit that we studied (See Fig.7.1) Let the input be the current waveform $i_s(\cdot)$, and let the response be the voltage waveform $v(\cdot)$.

The zero-response state of the linear time-invariant parallel RC circuit is a linear is a linear function of the input: that is the dependence of the zero-response waveform on the input waveform has the property of additivity and homogeneity

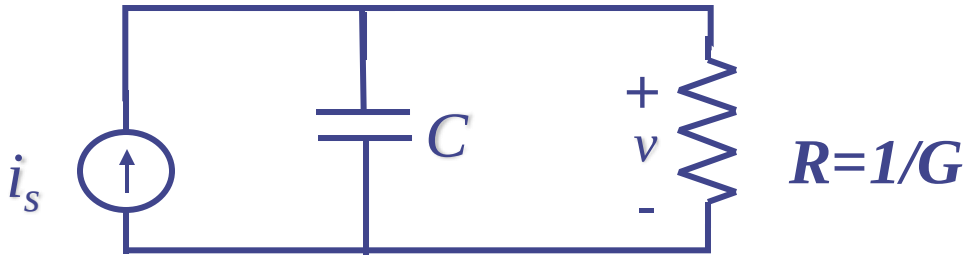

Fig.7.1 Linear time-invariant *RC* circuit with input i_s and response v

1. Let us check additivity. Consider two input currents i_1 and i_2 that are both applied at t_0. Note that by i_1 (and also i_2)we mean current waveform that starts at t_0 and goes forever. Call v_1 and v_2 the corresponding zero-state responses. By definition, v_1 is the unique solution of the differential equation

$$C\frac{dv_1}{dt}+Gv_1=i_1(t) \qquad t\geq t_0 \tag{7.1}$$

with

$$v_1(t_0)=0 \tag{7.2}$$

Similarly, v_2 is the unique solution of

$$C\frac{dv_2}{dt}+Gv_2=i_2(t) \qquad t\geq t_0 \tag{7.3}$$

with

$$v_2(t_0)=0 \tag{7.4}$$

Adding (7.1) and (7.3), and taking (7.2) and (7.4) into account, we see that the function $v_1 + v_2$ satisfies

$$C\frac{d}{dt}\left(v_1+v_2\right)+G\left(v_1+v_2\right)=i_1(t)+i_2(t) \qquad t\geq t_0 \tag{7.5}$$

with $$v_1(t_0)+v_2(t_0)=0 \qquad (7.6)$$

By definition the zero-state response to the input i_1+i_2 applied at $t=t_0$ is the unique solution of the differential equation

$$C\frac{dy}{dt}+Gy=i_1(t)+i_2(t) \qquad t\geq t_0 \qquad (7.7)$$

with $$y(t_0)=0 \qquad (7.8)$$

By the uniqueness theorem for the solution of such differential equations and by comparing (7.5) and (7.6) with (7.7) and (7.8), we arrive at the conclusion that the waveform $v_1(\cdot)+v_2(\cdot)$ is the zero-state response to the input waveform $i_1(\cdot)+i_2(\cdot)$. Since this reasoning applies to *any* input $i_1(\cdot)$ and *any* $i_2(\cdot)$ applied at any time t_0, we have shown that *the zero-state response of the RC circuit is a function of the input, which obeys the additivity property*.

2. Let us check homogeneity. We consider the input $i_1(\cdot)$ (applied at t_0) and the input $ki_1(\cdot)$, where k is an arbitrary real constant.

By definition, the zero-state response due to i_1 satisfies (7.1) and (7.2). Similarly, the zero-state response due to $ki_1(\cdot)$ satisfies the differential equation

$$C\frac{dy}{dt} + Gy = ki_1(t) \qquad t \geq t_0 \tag{7.9}$$

with

$$y(t_0) = 0 \tag{7.10}$$

By multiplying (7.1) and (7.2) by the constant k, we obtain

$$C\frac{d}{dt}(kv_1) + G(kv_1) = ki_1(t) \qquad t \geq 0 \tag{7.11}$$

with

$$kv_1(t_0) = 0 \tag{7.12}$$

Again, the comparison of the four equations above, together with the uniqueness theorem of ordinary differential equations, leads to the conclusion that the zero-state response due to ki_1 is kv_1. Since this reasoning applies to *any* input waveform $i_1(\cdot)$, *any* initial time t_0 and any constant k, we have shown that *the zero-state response of the RC circuit is a function of the input, which obeys the homogeneity property*.

The $\mathcal{Z}_{t_0}$ operator

The linearity of the zero-state response can be expressed symbolically by introducing the operator $\mathcal{Z}_{t_0}$. For the RC circuit in Fig.7.1, let $\mathcal{Z}_{t_0}$ denote the waveform of the zero-state Response of the RC circuit to the input $i_1(\cdot)$. The subscript t_0 in $\mathcal{Z}_{t_0}$ is used to indicate that the RC circuit is in the zero state at time t_0 and that the input is applied at t_0. Therefore, the linearity of the zero-state response means precisely the following:

1. For all input waveforms $i_1(\cdot)$ and $i_2(\cdot)$ defined for $t \geq t_0$ and taken to be identically zero for $t < t_0$), the zero state response due to the input $i_1(\cdot) + i_2(\cdot)$ is the sum of the zero-state response due to $i_1(\cdot)$ alone and the zero-state response due to $i_2(\cdot)$ alone; That is,

$$\mathcal{Z}_{t_0}(i_1 + i_2) = \mathcal{Z}_{t_0}(i_1) + \mathcal{Z}_{t_0}(i_2) \tag{7.13}$$

2. For all real numbers α and all input waveforms $i(\cdot)$, the zero-state response due to the input $\alpha\, i(\cdot)$ is equal to α times the zero-state response due to the input $i(\cdot)$; that is

$$\mathcal{Z}_{t_0}(\alpha i) = \alpha \mathcal{Z}_{t_0}(i) \tag{7.14}$$

Remarks

1. If the capacitor and resistor in Fig.7.1 are linear and time varying, the differential equation is, for $t \geq t_0$

$$\frac{d}{dt}\left[C(t)v(t)\right] + G(t)v(t) = i_s(t) \qquad (7.15)$$

The zero-state response is still a linear function of the input; indeed the proof of additivity and homogeneity would require only slight modifications. This proof still works because

$$\frac{d}{dt}\left[C(t)v_1(t)\right] + \frac{d}{dt}\left[C(t)v_2(t)\right] = \frac{d}{dt}\left\{C(t)\left[v_1(t) + v_2(t)\right]\right\} \qquad (7.16)$$

2. The following fact is true although we have only proven it for a special case. Consider any circuit that contains linear (time invariant or time varying) elements. Let the circuit be driven by a single independent source, and let the response be a branch voltage or branch current. *Then the zero-state response is a linear function of the input.*

3. The complete response is not a linear function of the input (unless the circuit starts from the zero state.

If the circuit is in an initial state $V_0 \neq 0$, that is $v_1(t)=V_0$ in Eq.(7.2) and $v_2=V_0$ in Eq. (7.4), then in Eq.(7.6) $[v_1(t)+v_2(t)]=2V_0$, which is not a specified initial state. It means that initial conditions, together with the differential equation, characterize the input-response relation of a circuit.

Exercise

Show that if a circuit includes nonlinear elements, the zero state response is not necessary a linear function of the input. Consider the circuit shown in Fig.7.2 and let the resistor be nonlinear with the characteristic

$$v_R = a_1 i_R + a_3 i_R^3$$

where a_1 and a_3 are positive constants. Show that the operator $\mathcal{L}_{t_0}$ does not posses the additivity property

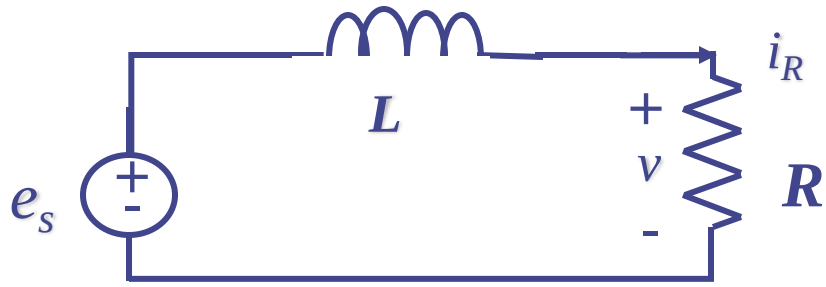

Fig.7.2 RL circuit with input e_s and response i_R

Linearity and Time Invariance

Step Response

Up to this point, whenever we connected an independent source to a circuit, we used a switch to indicate that a certain time *t=0* the switch closes or opens, and the input starts acting on the circuit. An alternate description of the operation of applying an input starting at a specified time, say *t=0*, can be supplied by using a *step function*. For a example, a constant current source that is applied to a circuit at *t=0* can be represented by a current source permanently connected to the circuit (without the switch) but with a step function waveform plotted in Fig.7.3.

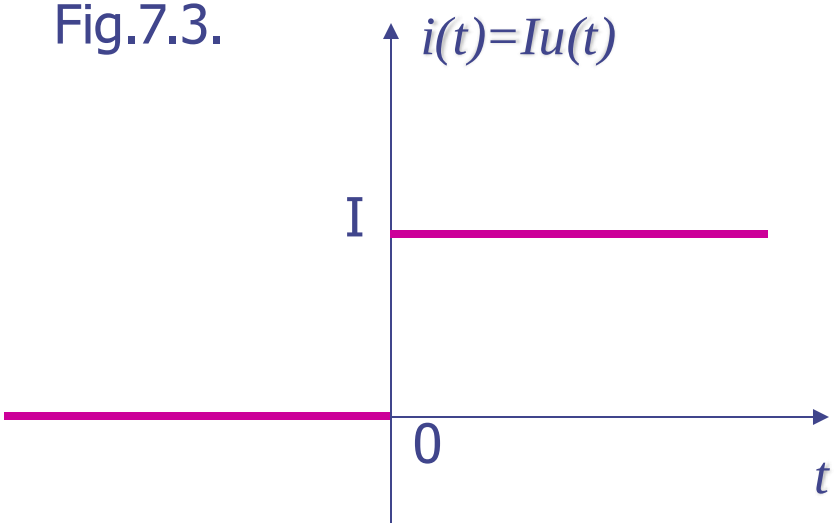

Fig. 7.3 Step function of magnitude *I*

Thus for $t<0$, $i(t)=0$, and for $t>0$, $i(t)=I$. At $t=0$ the current jumps from 0 to I.

We call the step response of a circuit its zero-state response to the unit step input $u(\cdot)$; we denote the step response by s. More precisely, $s(t)$ is the response at time t of the circuit provided that (1) its input is the step function u(·) and (2) the circuit is in zero state just prior the application of the unit step. As mentioned before, we adopt the convention that $s(t)=0$ for t<0. For the linear time-invariant RC circuit in Fig. 7.4 the step response is for all t

$$s(t) = u(t)R\left(1 - e^{-(1/RC)t}\right) \tag{7.17}$$

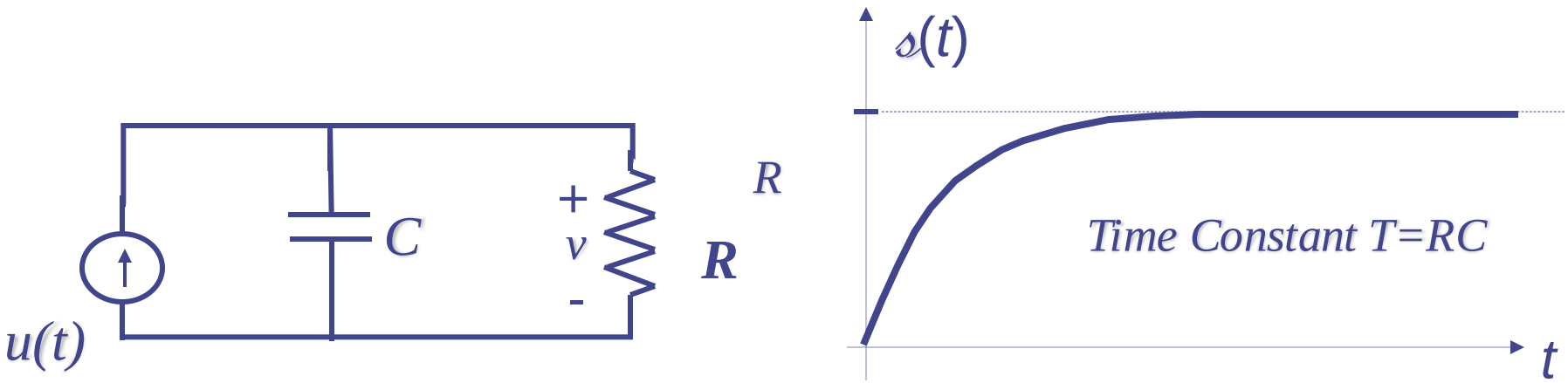

Fig. 7.4 Step response of simple RC circuit

The Time-Invariance Property

Let us consider any linear time-invariant circuit driven by a single independent source, and pick a network variable as a response. For example we might use the parallel RC circuit previously considered: Let the voltage v_0 be the zero-state response of the circuit due to the current source input i_0 starting at $t=0$. In terms of the operator we have $\mathcal{Z}_{t_0}$

$$v_0 = \mathcal{Z}_0(i_0) \tag{7.18}$$

The subscript 0 of the operator denotes specifically the starting time t=0. Thus, $v_0$is the unique solution of the differential equation

$$C\frac{dv_0}{dt} + Gv_0 = i_0(t) \qquad t \geq 0 \tag{7.19}$$

with

$$v_0(0) = 0 \tag{7.20}$$

In solving (7.19) and (7.20) we are only interested *in* $t \geq 0$. By a previous convention, we assume $i_0(t)=0$ and $v_0(t)=0$ for $t<0$. Suppose that without changing the shape of the waveform $i_0(\cdot)$, we shift it horizontally so that it starts now at time τ, with $\tau \geq 0$ (See Fig. 7.5).

The new graph defes a new function $i_\tau(\cdot)$, ; the subscript τ represents the new starting time. Obviously from graph, the ordinate of i_τ at time $\tau + t_1$ is equal to the ordinate of i_0 at time t_1; thus, since t_1 is arbitrary

$$i_\tau(\tau + t_1) = i_0(t_1) \quad \text{for all } t_1$$

If we set $t=\tau+t_1$, we obtain

$$i_\tau = \begin{cases} i_0(t-\tau) & t \geq 0 \\ 0 & t < 0 \end{cases} \tag{7.21}$$

Consider now v_τ, the response of the RC circuit to i_τ ,given that the circuit is in the zero state at time0; that is

$$v_\tau = \mathscr{Z}_0(i_\tau) \tag{7.22}$$

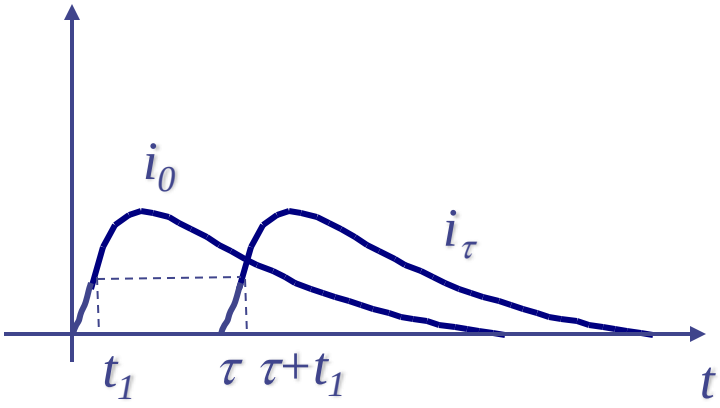

Fig. 7.5. The waveform i_t is the result of shifting the waveform i_0 by τ sec.

More precisely, v_τ is the unique solution of

$$C\frac{dv_\tau(t)}{dt} + Gv_\tau(t) = i_\tau(t) \qquad t \geq 0 \tag{7.23}$$

with

$$v_\tau(0) = 0 \tag{7.24}$$

Intuitively, we expect that the waveform v_τ will be the waveform v_0 shifted by τ. Indeed, the circuit is time invariant; therefore, its response to i_τ applied at time τ is, except for a shift of time, the same as its response to i_0 applied at time $t=0$. This fact illustrated in Fig. 7.6.

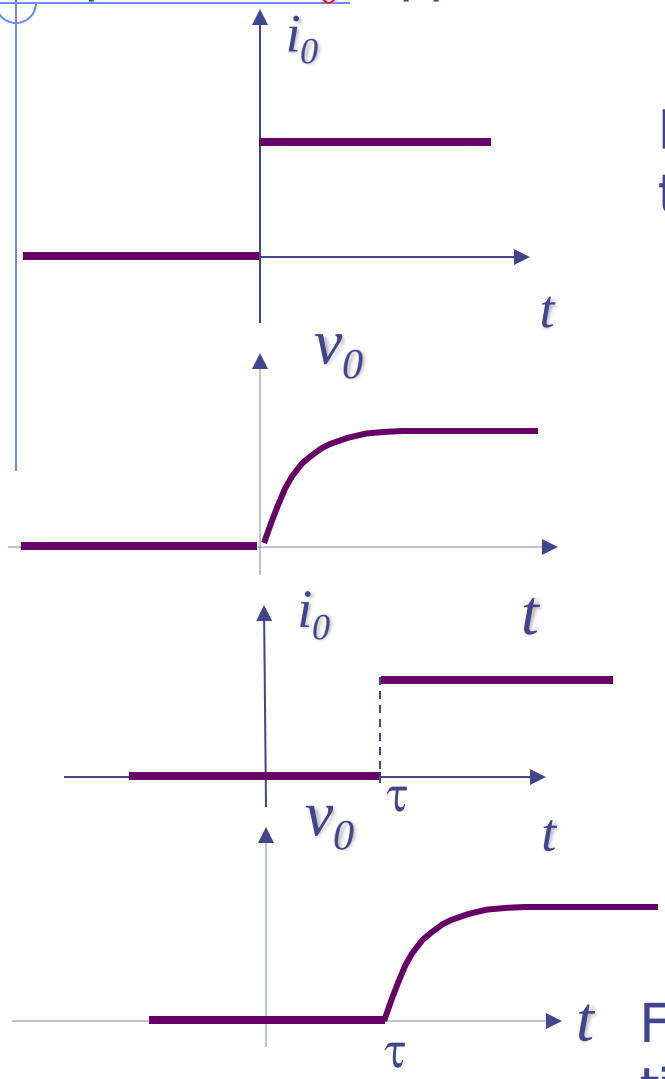

Let us prove this statement. We'll proceed in two steps.

1. On the interval $(0,\tau)$, v_τ is identical to zero; indeed, $v_\tau \equiv 0$ satisfies Eq.(7.23) for $0 \le t \le \tau$ (because $i_\tau \equiv 0$ on that interval) and the initial condition (7.24). Since on $v_\tau \equiv 0$ on $0 \le t \le \tau$, it follows that

$$v_\tau(\tau) = 0 \qquad (7.25)$$

2. Now we must determine v_τ for $t \ge \tau$. In this task we use Eq. (7.25) as our initial condition.

Fig. 7.6. Illustration of the time-invariant property.

We assert that the waveform obtained by shifting v_0 by τ satisfies Eq. (7.23) for $t \geq \tau$ and Eq. (7.25). To prove this statement, let us verify that the function y, defined by $y(t)=v_0(t-\tau)$, satisfies the differential equation (7.23) for $t \geq \tau$ and the initial condition (7.25)

Replacing t by $t-\tau$ in Eq.(7.19), we obtain

$$C\frac{d}{dt}\left[v_0(t-\tau)\right]+Gv_0(t-\tau)=i_0(t-\tau)=i_\tau \qquad t\geq 0 \tag{7.26}$$

or, by definition,

$$C\frac{d}{dt}\left[y(t)\right]+Gy(t)=i_\tau \qquad t\geq 0 \tag{7.27}$$

which is precisely Eq.(7.23) for $t \geq \tau$. The initial condition is obviously satisfied since

$$y(\tau)=v_0(t-\tau)\big|_{t=\tau}=v_0(0)=0$$

In other words, the function $y(t)=v_0(t-\tau)$, satisfies the differential equation (7.23) for $t \geq \tau$ and the initial condition (7.25). This fact, together with $v_\tau \equiv 0$ on $(0,\tau)$, ,implies that the waveform v_0 shifted by τ is $\mathcal{Z}_0$, the zero-state response to i_τ.

Example

If $i_0(t) = Iu(t)$, then

$$v_0(t) = u(t)RI\left(1 - e^{-t/RC}\right) \quad \text{for all} \quad t$$

and the zero-state response to $i_\tau(t) = i_0(t-\tau) = Iu(t-\tau)$ is

$$v_\tau(t) = u(t-\tau)RI\left(1 - e^{-(t-\tau)/RC}\right) \quad \text{for all} \quad t$$

Remarks

1. The reasoning outlined above does not depend upon the particular value $\tau \geq 0$, nor does it depend upon the shape of the input waveform i_0. In other words, for all $\tau \geq 0$ and all i_0, $\mathcal{Z}_0(i_\tau)$ is identical with the waveform $\mathcal{Z}_0(i_0)$ shifted by τ. This fact called the *time-invariance property* of the linear time-invariant *RC* circuit.

2. It is crucial to observe that the constancy of C and G was used in arguing that Eq.(7.26) and (7.27) was simply Eq.(7.19) in which t-τ was substitute for t.

The Shift Operator

The idea of time invariance can be expressed precisely by the use of a *shift operator*. Let $f(\cdot)$ be a waveform defined for all t. Let $\mathcal{F}_\tau$ be an operator which when applied to f yields an identical waveform except that it has been delayed by τ; the shifted waveform is called $f_\tau(\cdot)$ and its ordinates are given by

$$f_\tau(t) = f(t-\tau) \quad \text{for all} \quad t$$

In other words, the result of applying the operator $\mathcal{F}_\tau$ to the waveform f is a new waveform denoted by $\mathcal{F}_\tau f$, such that the value at any time t of the new waveform, denoted by $(\mathcal{F}_\tau f)(t)$, is related to the values of f by

$$\mathcal{F}_\tau(f)(t) = f(t-\tau) \quad \text{for all} \quad t$$

In the notation of our previous discussion we have $\mathcal{F}_\tau f = f_\tau$. The operator $\mathcal{F}_\tau$ is called a *shift operator*. Shift operator is a *linear operator.* Indeed it is additive. Thus,

$$\mathcal{F}_\tau(f+g) = \mathcal{F}_\tau f + \mathcal{F}_\tau g$$

that is, the result of shifting $f+g$ is equal to the sum of the shifted f and the shifted g.

It also homogeneous. If α is any real number and f is any waveform

$$\mathcal{F}_\tau[\alpha f] = \alpha \mathcal{F}_\tau f$$

That is, if we multiply the waveform f by the number α and shift the result, we have the very same waveform that would have had if we first shifted f and then multiplied it by α .

Let us use the shift operator to express the time-invariance property. As before let $\mathcal{Z}_0(i_0)$ be the response of the circuit to the input i_0 provided that the circuit is in the zero state at time 0. Previously, we used $v_0(t)$ to denote the value of the zero-state response at time t (see Eq. (7.18)). The reason that $\mathcal{Z}_0(i_0)$ is used now is to emphasize the dependence of the zero-state response on the whole input waveform $i_0(\cdot)$ and to emphasize the time at which the circuit is in the zero state.

$$\mathcal{F}_\tau[\mathcal{Z}_0(i_0)] = \mathcal{Z}_0[\mathcal{F}_\tau i_0] \qquad (7.28)$$

Equation (7.28) states the time-invariant property of linear time-invariant circuits.

Remark

The time-invariance property as expressed by (7.28) may be interpreted as that the operators $\mathcal{F}_\tau$ and $\mathcal{Z}_0$ commute; i.e., the order of applying the two operations is immaterial.

It is a remarkable fact that the operators $\mathcal{F}_\tau$ and $\mathcal{Z}_0$ commute for linear time-invariant circuits, because in the large majority of cases if the order of two operations is interchanged, the results are drastically different.

Example

Let us consider an arbitrary linear time invariant circuit. Suppose that we measured the zero-state response v_0 to the pulse i_0 shown in Fig. 7.7 and have a record o the waveform v_0. Using our previous notations, this means that $v_0 = \mathcal{Z}_0(i_0)$. The problem is to find the zero-state response v to the input i shown in Fig.7.8, where

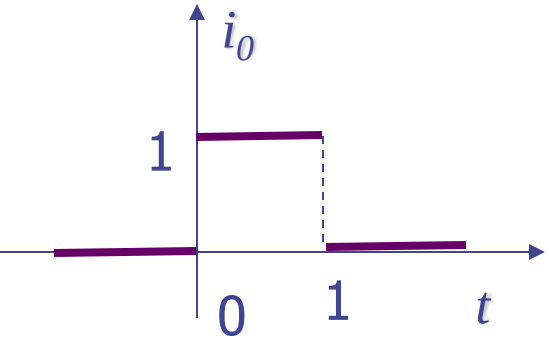

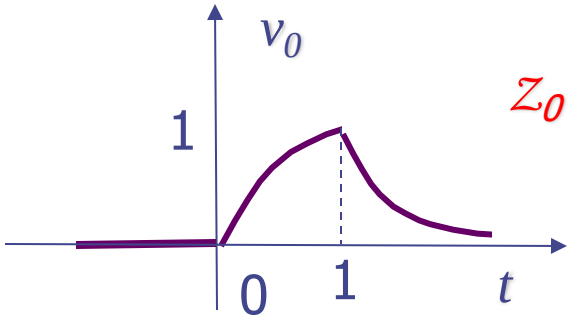

$\mathcal{Z}_0(i_0)=v_0$

Fig. 7.7 Current i_0 and corresponding zero-state response v_0

$$i(t) = \begin{cases} 1 & \text{for} \quad 0 < t \le 1 \\ 3 & \text{for} \quad 1 < t \le 2 \\ 0 & \text{for} \quad 2 < t \le 3 \\ -2 & \text{for} \quad 3 < t \le 4 \\ 0 & \text{for} \quad 4 < t \end{cases}$$

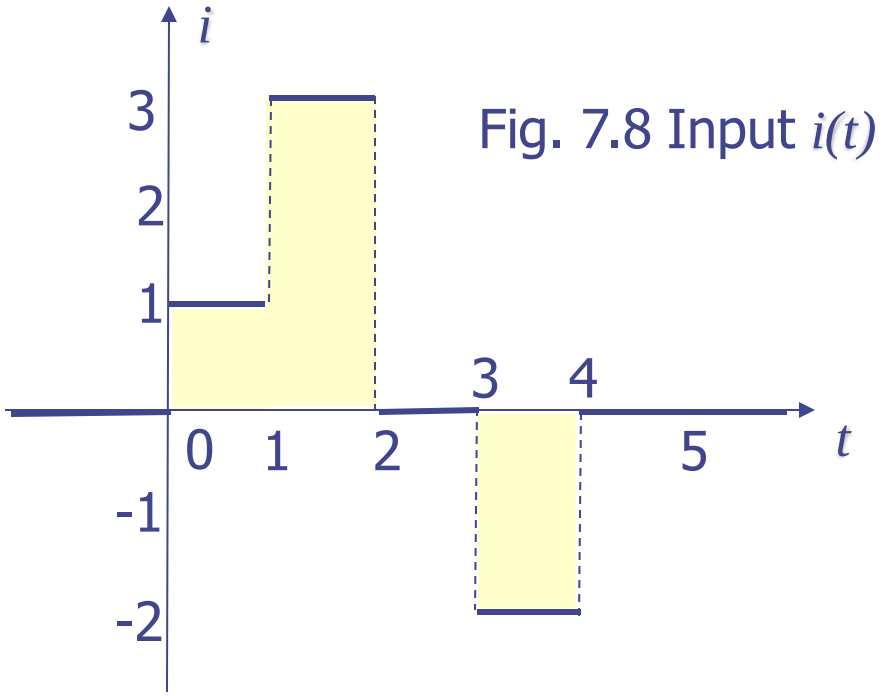

Fig. 7.8 Input $i(t)$

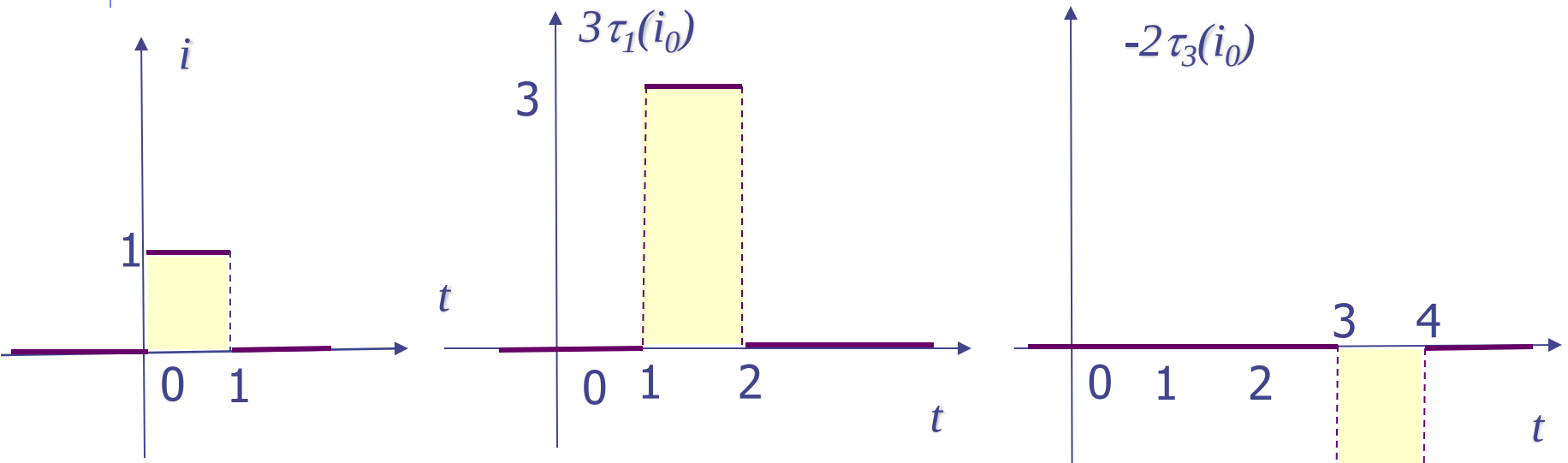

Fig. 7.9 Decomposition of i in terms of shifted pulses

The key observation is that the given input can be represented as a linear combination of i_0 and multiplies of i_0 shifted in time. The process is illustrated in Fig. 7.9; the sum of the three functions is shown is i. It is obvious from the graphs of i and i_0 that

$$i = i_0 + 3\mathcal{F}_1(i_0) - 2\mathcal{F}_3(i_0)$$

Now call v the zero-state response we get

$$\begin{aligned} v &= \mathcal{Z}_0(i) \\ &= \mathcal{Z}_0\left[i_0 + 3\mathcal{F}_1(i_0) - 2\mathcal{F}_3(i_0)\right] \end{aligned}$$

By the linearity of the zero-state response we get

$$v = \mathcal{Z}_0(i_0) + 3\mathcal{Z}_0\left[\mathcal{F}_1(i_0)\right] - 2\mathcal{Z}_0\left[\mathcal{F}_3(i_0)\right]$$

and by the time-invariance property

$$v = \mathcal{Z}_0(i_0) + 3\mathcal{F}_1\left[\mathcal{Z}_0(i_0)\right] - 2\mathcal{F}_3\left[\mathcal{Z}_0(i_0)\right]$$

Since

$$v_0 = \mathcal{Z}_0(i_0)$$

$$v = v_0 + 3\mathcal{F}_1(v_0) - 2\mathcal{F}_3(v_0)$$

or

$$v = v_0(t) + 3v_0(t-1) - 2v_0(t-3) \text{ for } t \geq 0$$

Remark

The method used to calculate v in terms of v_0 is usually refereed to as the ***superposition*** method. It is fundamental to realize that we have to invoke the time-invariance property and the fact that the zero-state response is a linear function of the input.

Exercise

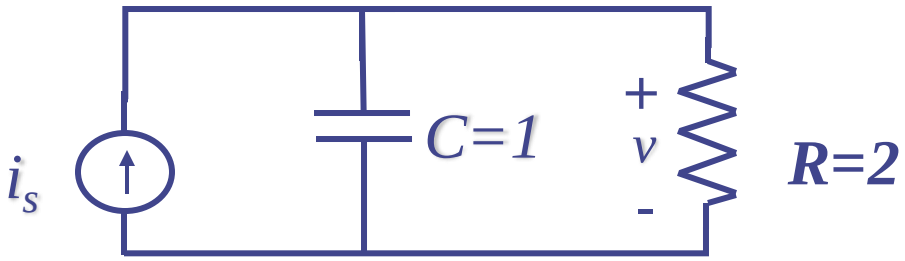

(a)

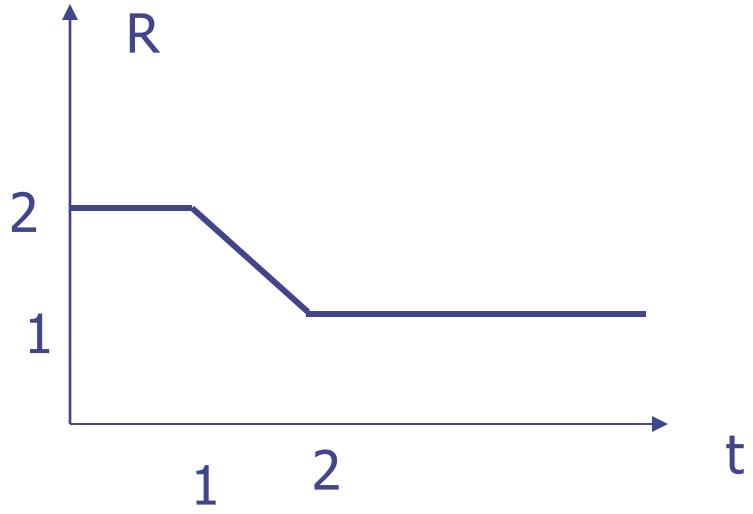

(b)

Fig.7.10 (a) A simple *RC* circuit; (b) time-varying resistor characteristic

Consider the linear time-invariant RC circuit shown in Fig. 7.10a; i_s is its input, and v is its response

a. Calculate and sketch the zero-state response to the following inputs:

$$i_1(t) = \begin{cases} 1 & \text{for} \quad 0 < t \le 0.5 \\ 0 & \text{for} \quad 0.5 < t \end{cases}$$

$$i_2(t) = \begin{cases} 3 & \text{for} \quad 0 < t \le 0.5 \\ 0 & \text{for} \quad 0.5 < t \le 2 \\ -0.5 & \text{for} \quad 2 < t \le 2.5 \\ 0 & \text{for} \quad 2.5 < t \end{cases}$$

b. Suppose now that the resistor is time-varying but still linear. Let its resistance be a function of time as shown in Fig.7.10b.

Impulse Response

The zero state-response of a time-invariant circuit to a *unit* impulse amplitude at $t=0$ is called *impulse response* of a circuit and is denoted by h. More precisely, $h(t)$ is the response at time t of the circuit provided that (1) its input is the unit impulse δ and (2) it is in the zero state just prior to the application of the impulse. For convenience we shall define h to be zero for t>0.

1st method

Let us approximate the impulse by the pulse function p_Δ and let us calculate the impulse response of the parallel RC circuit shown in Fig.7.11. The input to the circuit is the current source i_s, and the response is the output voltage v. Since the impulse response is defined to be zero-state response to δ, the impulse response is the solution of the differential equation

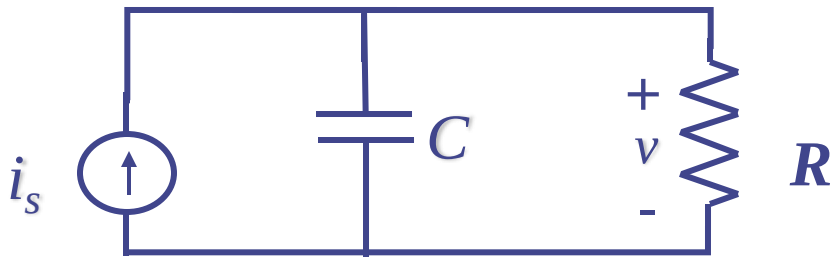

Fig.7.11 Linear time-invariant circuit

$$C\frac{dv}{dt}+Gv=\delta(t) \qquad (7.29)$$

with

$$v(0-)=0 \qquad (7.30)$$

where the symbol $0-$ designates the time immediately before $t=0$.

Equation (7.30) states that the circuit is in the zero state just prior to the application of the input. In order to solve (7.29) we run into some difficulties since, strictly speaking, δ is not a function. Therefore, the solution will be obtained by approximating unit impulse δ by the pulse function p_Δ, computing the resulting solution, and then letting $\Delta \to 0$. Recall that p_Δ is defined by

$$p_\Delta(t) = \begin{cases} 0 & t < 0 \\ \dfrac{1}{\Delta} & 0 < t < \Delta \\ 0 & \Delta < t \end{cases}$$

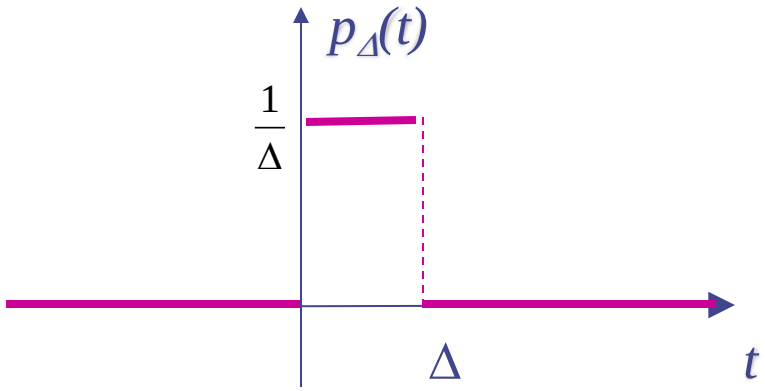

and it is plotted in Fig. 7.12. The first step is to solve for h_Δ, the zero state response of the RC circuit to p_Δ, where Δ is chosen to be much smaller than the time constant RC. The waveform is the solution of

$$C\frac{dh_\Delta}{dt} + \frac{1}{R}h_\Delta = \frac{1}{\Delta} \qquad 0 < t < \Delta \tag{7.31}$$

$$C\frac{dh_\Delta}{dt} + \frac{1}{R}h_\Delta = 0 \qquad t > \Delta \tag{7.32}$$

with h_Δ =0. Clearly, 1/Δ is a constant; hence from (7.31)

$$h_\Delta(t) = \frac{R}{\Delta}\left(1 - e^{-t/RC}\right) \quad 0 < t < \Delta \tag{7.33}$$

and it is the zero-state response due to a step $(1/\Delta)u(t)$. From (7.32), h_Δ for $t>0$ is the zero-input response that starts from $h_\Delta(\Delta)$ at $t=\Delta$; thus

$$h_\Delta(t) = h_\Delta(\Delta)e^{-(t-\Delta)/RC} \quad t > \Delta \tag{7.34}$$

The total response h_Δ from (7.31) and (7.32) is shown in Fig. 7.13a.

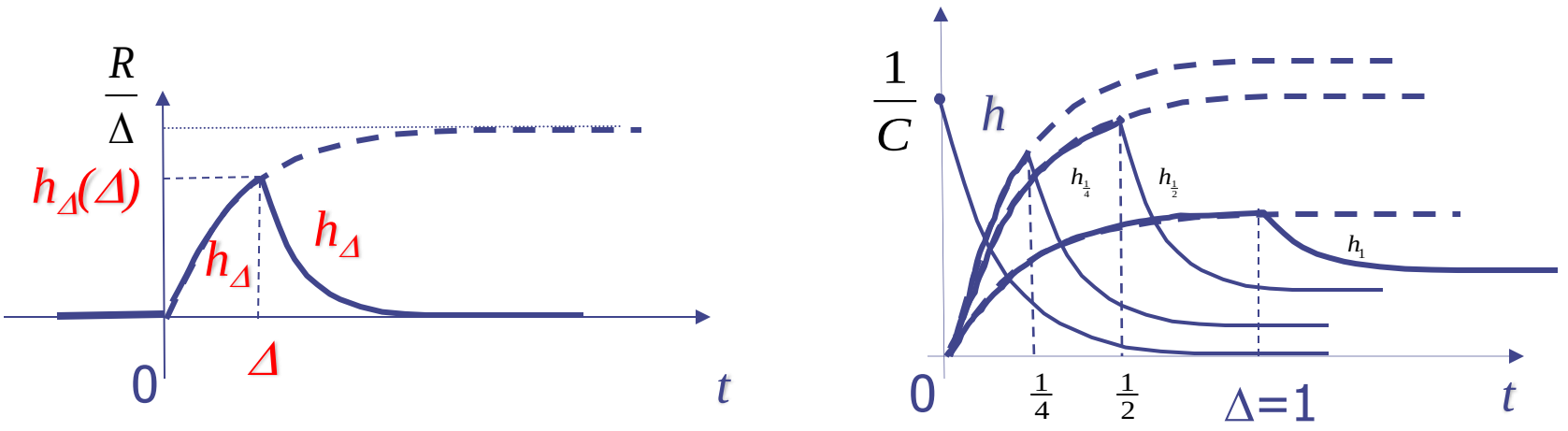

Fig.7.13 (a) Zero-sate response of p_Δ ; (b) the response as $\Delta \to 0$

From (7.33)

$$h_\Delta(\Delta) = \frac{R}{\Delta}\left(1 - e^{-\Delta/RC}\right)$$

Since Δ is much smaller than RC, using

$$e^{-x} = 1 - x + \frac{x^2}{2!} - \frac{x^3}{3!} + \cdots$$

we obtain

$$h_\Delta(\Delta) = \frac{R}{\Delta}\left[\frac{\Delta}{RC} - \frac{1}{2!}\left(\frac{\Delta}{RC}\right)^2 + \cdots\right]$$

$$= \frac{1}{C}\left[1 - \frac{1}{2!}\left(\frac{\Delta}{RC}\right) + \cdots\right]$$

Similarly, from (7.33) for Δ very small and $0<t<\Delta$, expanding the exponential function, we obtain

$$h_\Delta(\Delta) = \frac{1}{C}\frac{t}{\Delta} + \cdots \qquad 0 < t < \Delta$$

Note that the slope of the curve h_Δ over $(0,\Delta)$ is $1/C\Delta$. This slope is very large since Δ is small. As $\Delta \to 0$, the curve h_Δ over $(0,\Delta)$ becomes steeper and steeper, and $h_\Delta(\Delta) \to 1/C$. In the limit, h_Δ jumps from 0 to $1/C$ at the instant $t=0$. For t>0, we obtain, form (7.34)

$$h_\Delta(t) \to \frac{1}{C} e^{-t/RC}$$

As Δ approaches zero, h_Δ approaches the impulse h as shown in Fig.7.13b. Recalling that by convention we set h(t)=0 for t<0, we can therefore write

$$h(t) = u(t)\frac{1}{C} e^{-t/RC} \quad \text{for all } t \qquad (7.35)$$

The impulse response h is shown in Fig. 7.14.

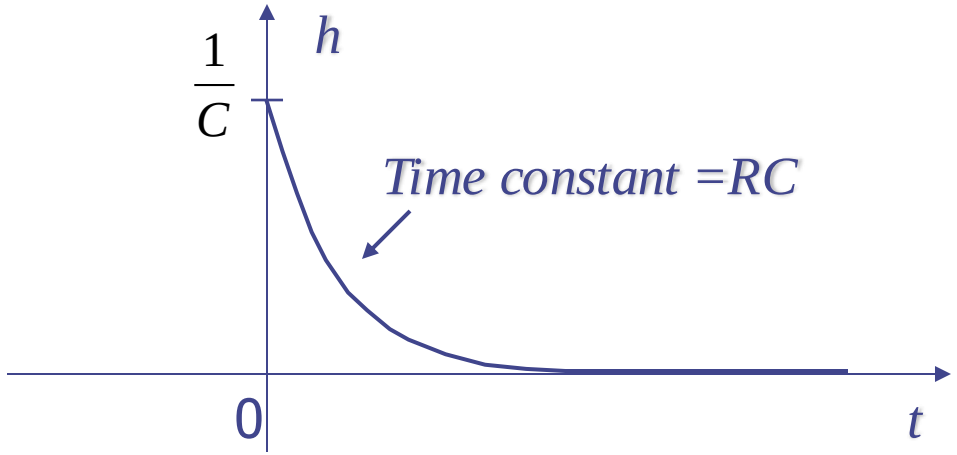

Fig. 7.14. Impulse response of the RC of Fig. 7.11

Remarks

1. The calculating of the impulse response is a straightforward procedure; it requires only the approximation of δ by a suitable pulse, here p_Δ . The only requirements that p_Δ must satisfy are that it be zero outside the interval $(0,\Delta)$ and that are under p_Δ be equal to 1; that is

$$\int_0^\Delta p_\Delta(t)dt = 1$$

It is a fact that the slope of p_Δ is irrelevant ; therefore we choose a shape that requires the least amount of work. We might very well chosen a triangular pulse as shown in Fig.7.15. Observe that the Maximum amplitude of the triangular pulse is now $2/\Delta$; this is required in order that the are under the pulse be unity for all $\Delta>0$.

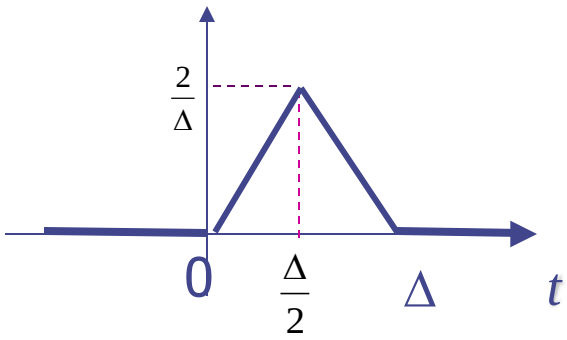

Fig.7.15 A triangular pulse can also be used for impulse approximation

2. Since $\delta(t)=0$ for $t>0$ (that is, the input is identically zero for t>0), it follows that the impulse response h(t)is, for t>0, identical to a particular zero-input response.

Relation between impulse response and step response

We want to show that *the impulse response of a linear time-invariant circuit is the time derivative of its step response*

Symbolically

$$h = \frac{d\mathcal{s}}{dt} \quad \text{or equivalently} \quad \mathcal{s}(t) = \int_{-\infty}^{t} h(t')dt' \tag{7.36}$$

We prove this important statement by approximation the impulse by the pulse function p_Δ . Let h_Δ be the zero-state response to the input p_Δ; that

$$h_\Delta = \mathcal{Z}_0(p_\Delta)$$

As $\Delta \to 0$, the pulse function p_Δ approaches δ , the unit impulse, and the zero-state response to the pulse input, approaches the impulse response h. Now consider p_Δ as a superposition of a step and delayed step as shown in Fig.7.16. Thus,

$$p_\Delta = \frac{1}{\Delta}[u(t) - u(t-\Delta)] = \frac{1}{\Delta}u + \frac{-1}{\Delta}\mathcal{T}_\Delta u$$

By the linearity of the zero-state response, we have

$$\mathcal{Z}_0(p_\Delta) = \mathcal{Z}_0\left(\frac{1}{\Delta}u + \frac{-1}{\Delta}\mathcal{F}_\Delta u\right)$$

$$= \frac{1}{\Delta}\mathcal{Z}_0(u) + \frac{-1}{\Delta}\mathcal{Z}_0(\mathcal{F}_\Delta u) \qquad (7.37)$$

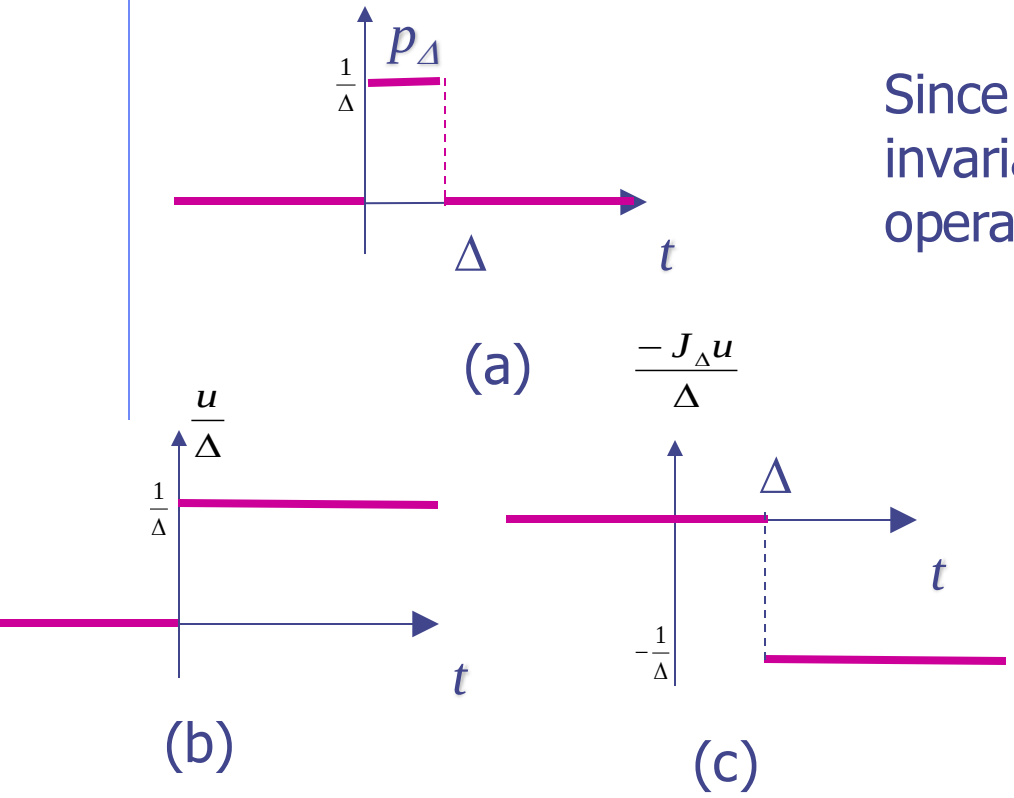

Fig. 7.16 The pulse function p_Δ in (a) can be considered as the sum of a step function in (b)and delayed step function in (c)

Since the circuit is linear and time-invariant, the $\mathcal{Z}_0$ operator and the shift operator commute; thus

$$\mathcal{Z}_0(\mathcal{F}_\Delta u) = \mathcal{F}_\Delta \mathcal{Z}_0(u) \qquad (7.38)$$

Let us denote the step response by

$$s = \mathcal{Z}_0(u)$$

Equations (7.37) and (7.38) can be combined to yield

$$h_\Delta = \mathcal{Z}_0(p_\Delta) = \frac{1}{\Delta}\mathcal{s} - \frac{1}{\Delta}\mathcal{F}_\Delta \mathcal{s}$$

or

$$h_\Delta = \frac{1}{\Delta}s(t) - \frac{1}{\Delta}s(t-\Delta) = \frac{s(t)-s(t-\Delta)}{\Delta} \quad \text{for all } t$$

If $\Delta \to 0$ the right-hand side becomes the derivative; hence

$$\lim_{\Delta \to 0}(h_\Delta) = h(t) = \frac{ds}{dt}$$

Remark

The two equations in (7.36) do not hold for linear time-varying circuits; this should be expected since time invariance is used in a key step of derivation. Thus, for linear time-varying circuits the time derivative of the step function is not the impulse response.

2nd method

We use $h = \frac{d\mathcal{s}}{dt}$ Again considering the parallel circuit in Fig.7.11, we recall that its step response $\mathcal{s}$ is given by

$$\mathcal{s}(t) = u(t)R\left(1 - e^{-(1/RC)t}\right)$$

If we consider the right hand side as a product of two functions and use the rule of differentiation $(uv)' = u'v + uv'$ we obtain the impulse response

$$h(t) = \delta(t)R\left(1 - e^{-(1/RC)t}\right) + \frac{1}{C}u(t)e^{-(1/RC)t}$$

The first term is identically zero because for t≠0, δ(t)=0, and for t=0, $1 - e^{-(1/RC)t} = 0$, Therefore,

$$h(t) = \frac{1}{C}u(t)e^{-(1/RC)t}$$

That result checks with previously obtained in (7.35)

3d method

We use the differential equation directly. We propose to show that h defined by

$$h(t) = \frac{1}{C} u(t) e^{-(1/RC)t} \quad \text{for all } t$$

is the solution to the differential equation

$$C\frac{dv}{dt} + Gv = \delta(t) \qquad \text{with } v(0-) = 0 \tag{7.39}$$

In order not to prejudice the case, let us call y the solution to (7.39). Thus, we propose to show that y=h. Since $\delta(t)=0$ for t>0 and y is the solution of (7.39)., we must have

$$y(t) = y(0+)e^{-t/RC} \quad \text{for } t > 0 \tag{7.40}$$

This is shown in Fig.7.17a. Since $\delta(t)=0$ for $t<0$ and the circuit is in the zero state at time 0-, we must also have

$$y(t) = 0 \quad \text{for } t < 0 \tag{7.41}$$

This is shown in Fig. 7.17b. Combining (7.40) and (7.41), we conclude that

$$y(t) = u(t)y(0+)e^{-t/RC} \quad \text{for all } t \tag{7.42}$$

- It remains to calculate $y(0+)$, that is, the magnitude of the jump in the curve y at $t=0$.

$$\delta(t) = \frac{du(t)}{dt}$$

From (7.42) and by considering the right-hand side as a product of the functions, we obtain

$$\frac{dy}{dt}(t) = \delta(t)y(0+)e^{-t/RC} + u(t)y(0+)\frac{-1}{RC}e^{-t/RC}$$

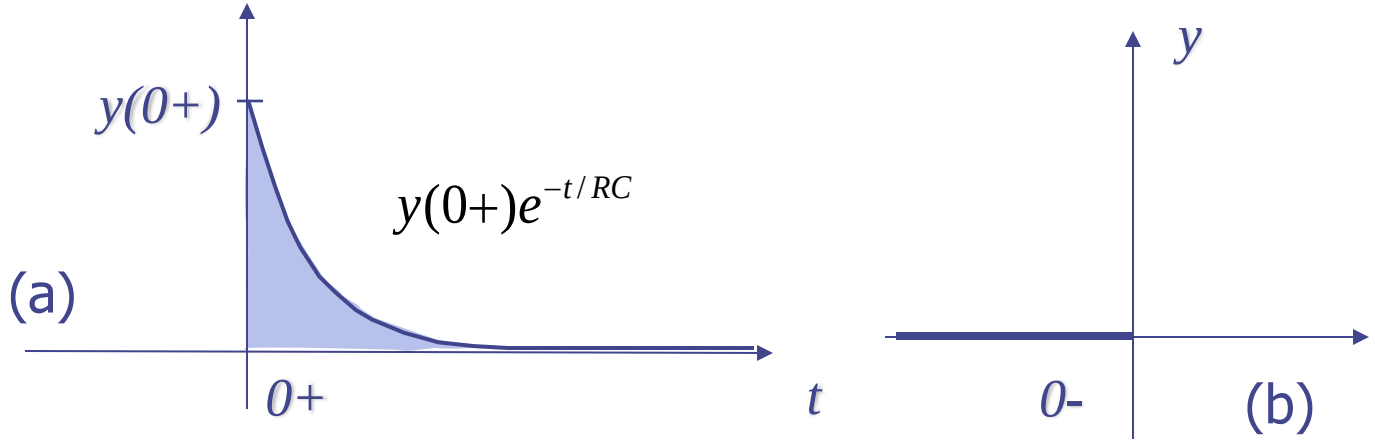

Fig.7.17 Impulse response for the parallel RC circuit. (a) $y(t)>0$; (b) $y(t)<0$

In the first term, since $\delta(t)$ is zero everywhere except t=0, we may t to zero in the factor of $\delta(t)$; thus

$$\frac{dy}{dt}(t) = \delta(t)y(0+) + u(t)y(0+)\frac{-1}{RC}e^{-t/RC}$$

Substituting this result into (7.39), we obtain

$$\delta(t)Cy(0+) - u(t)y(0+)Ge^{-t/RC} + Gu(t)y(0+)e^{-t/RC} = \delta(t)$$

$$y(0+) = \frac{1}{C}$$

Inserting this value of $y(+0)$ into (7.42), we conclude that the solution of (7.39) is actually h, the impulse response calculated previously.

Remark

WE shown that the solution of the differential equation

$$C\frac{d}{dt}(v) + Gv = \delta \quad \text{with } v(0-) = 0$$

for t>0 is identical with the solution of

$$C\frac{d}{dt}(v) + Gv = 0 \quad \text{with } v(0+) = \frac{1}{C} \qquad (7.43)$$

for t>0

This can be seen by integrating both sides of (7.39) form $t=0-$ to $t=0+$ to obtain

$$Cv(0+) - Cv(0-) + G\int_{0-}^{0+} v(t')dt' = 1$$

Since v is finite, $G\int_{0-}^{0+} v(t')dt' = 0$, and since $v(0-)=0$, we obtain $v(0+) = \frac{1}{C}$

Step and Impulse Response for Simple Circuits

Example 1

Let us calculate the impulse response and the step response of RL circuit shown in Fig.7.1. the series connection of the linear time-invariant resistor and inductor is driven by a voltage source.

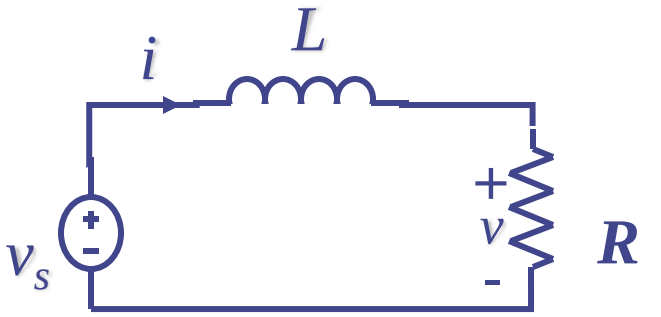

(a)

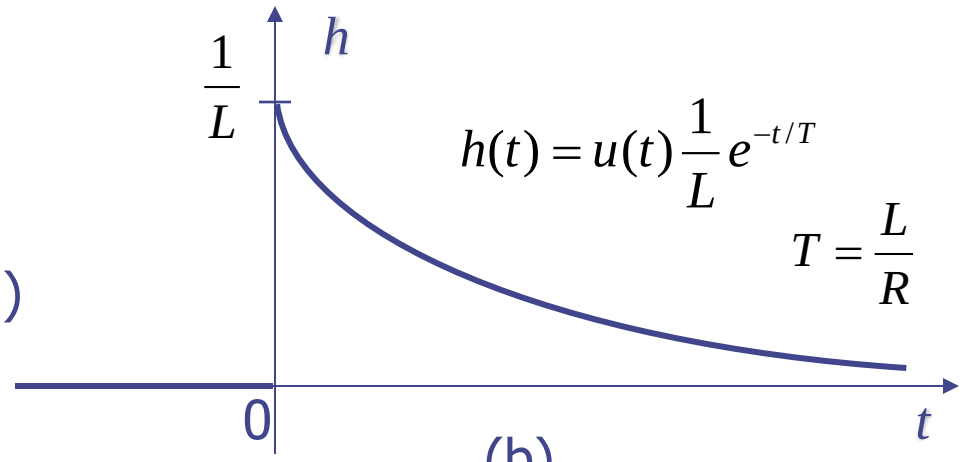

(b)

Fig.7.18 (a) Linear time-invariant *RL* circuit; v_s is the input and i is the response; (c) impulse step response

As far as the impulse response concerned, the differential equation for the current i is let to that of the same circuit with no voltage source but with the initial condition $i(0+)=1/L$; that is, for $t>0$

$$L\frac{di}{dt}+Ri=0 \qquad i(0+)=\frac{1}{L} \tag{7.44}$$

The solution is

$$i(t)=h(t)=\frac{1}{L}u(t)\left(1-e^{-(R/L)t}\right) \tag{7.45}$$

The step response can be obtained either from integration of (7.45) or directly from the differential equation

$$s(t)=u(t)\frac{1}{R}\left(1-e^{-(R/L)t}\right) \tag{7.46}$$

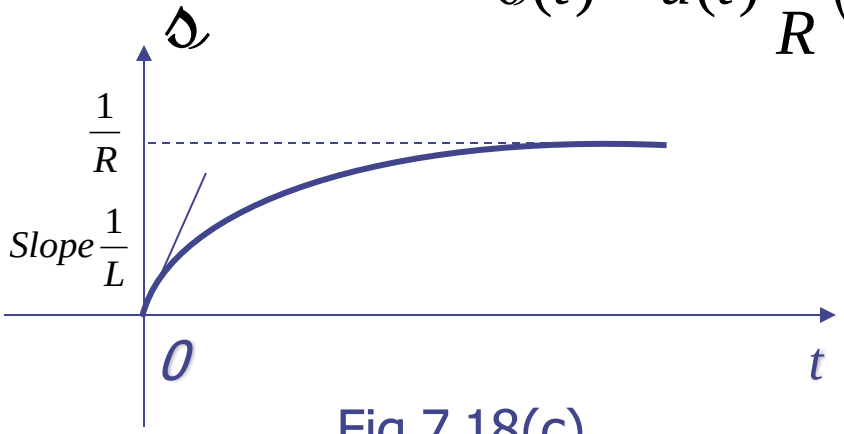

Fig.7.18(c)

As the step of voltage is applied to the circuit, that is at $0+$, the current in the circuit remains zero because, the current through an inductor cannot change instantaneously unless there is an infinitely large voltage across it.

Since the current is zero, the voltage cross the resistor must be zero. Therefore, at $0+$ all the voltage of the voltage source appear across the inductor; in fact $\left.\frac{di}{dt}\right|_{0+} = \frac{1}{L}$

As time increases, the current increases monotonically, and after a long time, the current becomes practically constant. Thus , for large t, $di/dt \approx 0$; that the voltage across the inductor is zero, and all the voltage of the source is across the resistor. Therefore, the current is approximately $1/R$. In the limit we reach what is called the steady state and $i=1/R$. $\rightarrow$ The inductor behaves as a *short circuit in the steady state for a step voltage input.*

Example 2

Consider the circuit in Fig. 7.19, where the series connection of a linear time invariant resistor R and a capacitor C is driven by a voltage source. The current through the resistor is the response of interest, and th problem is to find the impulse and step responses. The equation for the current i is given by writing KVL for the loop; thus

$$\frac{1}{C}\int_0^t i(t')dt' + Ri(t) = v_s(t) \qquad (7.47)$$

Let us use the charge on the capacitor as the variable; then (7.47) becomes

$$\frac{q}{C} + R\frac{dq}{dt} = v_s(t) \qquad (7.48)$$

Since we have to find the step and impulse responses, the initial conditions is q(0-)=0. If v_s is a unit step,(7.48) gives

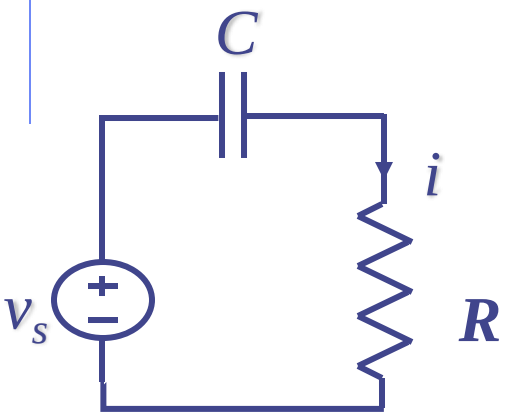

(a)

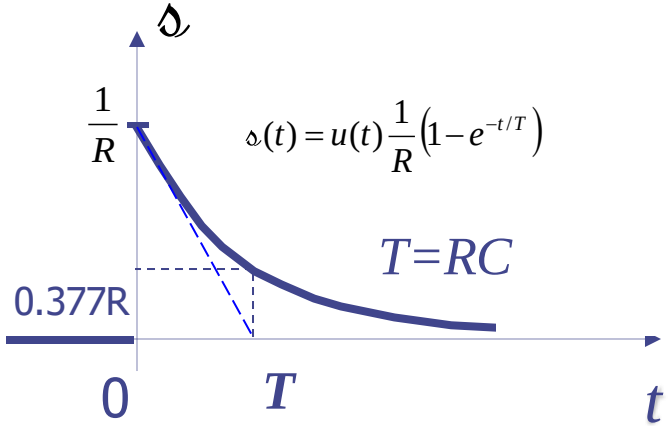

(b)

Fig.7.19 (a) Linear time-invariant RC circuit; v_s is the input and i is the response; (b) step response; (c) impulse response.

$$q_{\mathscr{s}} = u(t)C\left(1 - e^{-t/RC}\right)$$

And by differentiation, the step response for the current is

$$q_{\mathscr{s}} = \frac{1}{R}u(t)\left(1 - e^{-t/RC}\right)$$

And by differentiation, the step response for the current is

$$i_{\mathscr{s}}(t) = \mathscr{s}(t) = \frac{1}{R}u(t)e^{-t/RC}$$

If v_s is a unit impulse, (7.48) gives

$$q_{\mathscr{s}}(t) = \frac{1}{R}u(t)e^{-t/RC}$$

And by differentiation, the impulse response for the current is

$$i_{\delta}(t) = h(t) = \frac{1}{R}\delta(t) - \frac{1}{R^2C}u(t)e^{-t/RC}$$

We observe that in response to a step, the current is discontinuous at $t=0$; $i_s(0+)=1/R$ as we expect, since at $t=0$ there is no charge (hence no voltage) on the capacitor. In response to an impulse, the current includes an impulse of value $1/R$, and, for $t>0$, the capacitor discharges through the resistor.

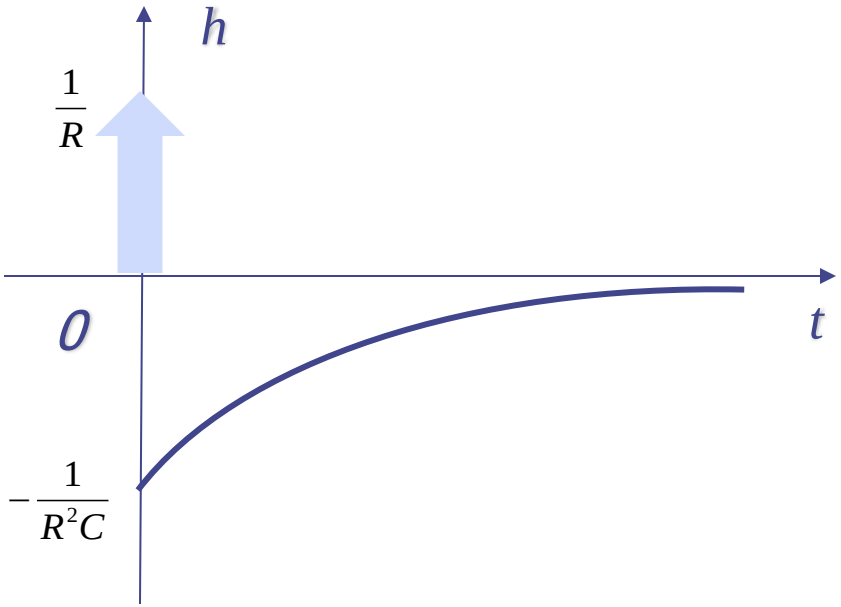

Fig.7.19 (c)

Table 7.1 Step and Impulse Responses for Simple Linear Time-invariant Circuits

i_s(input) v(response)	$s(t)$	$h(t)$
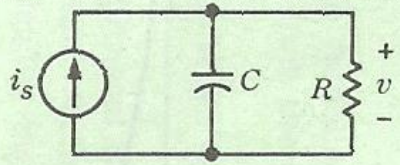 $C\frac{d}{dt}v + \frac{1}{R}v = i_s$	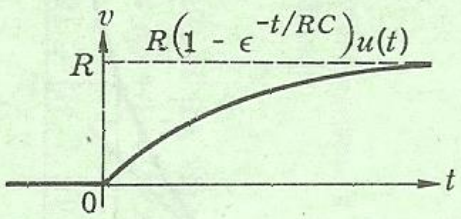	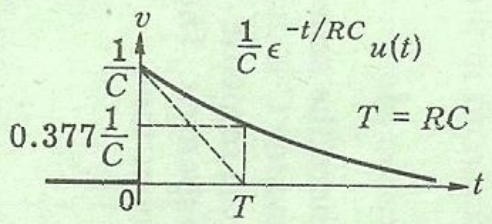
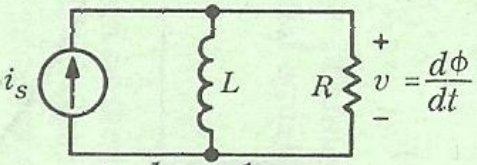 $\frac{1}{R}\frac{d}{dt}\phi + \frac{1}{L}\phi = i_s$	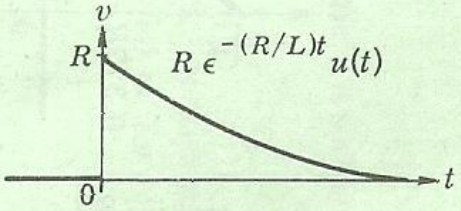	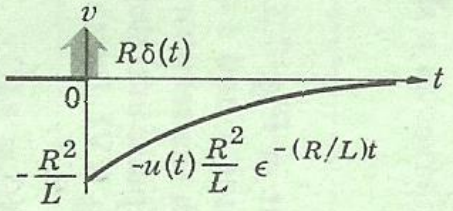
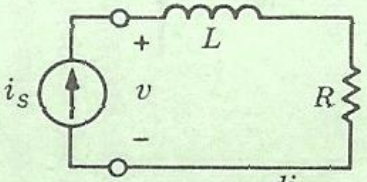 $v = Ri_s + L\frac{di_s}{dt}$	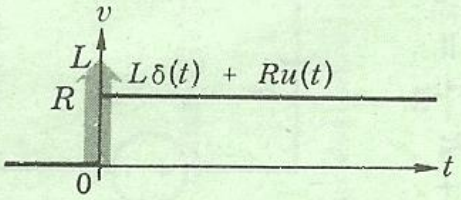	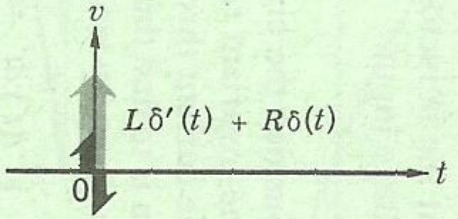
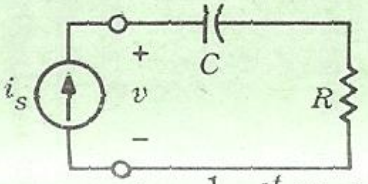 $v = Ri_s + \frac{1}{C}\int_0^t i_s(t')\,dt'$	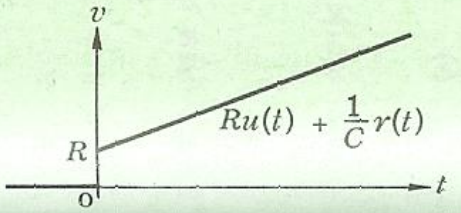	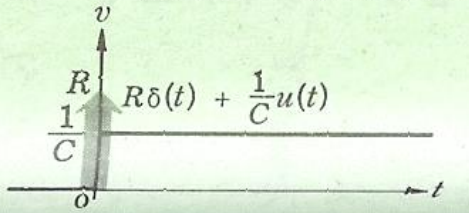

Table 7.1 Step and Impulse Responses for Simple Linear Time-invariant Circuits (*Continued*)

e_s(input) i(response)	$s(t)$	$h(t)$
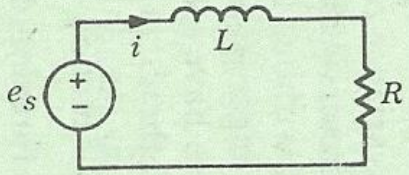 $L\frac{di}{dt} + Ri = e_s$	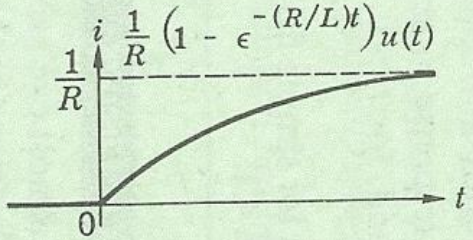	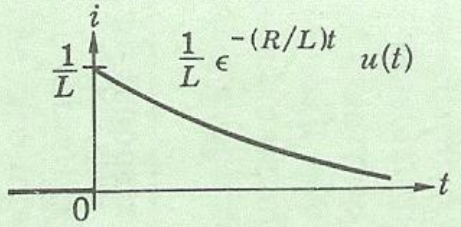
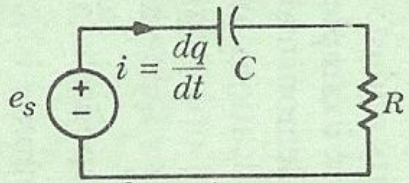 $R\frac{d}{dt}q + \frac{1}{C}q = e_s$	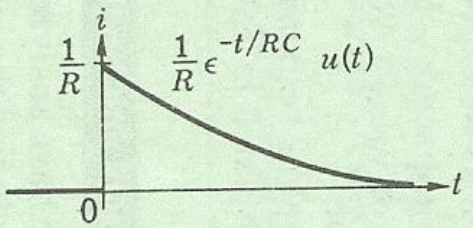	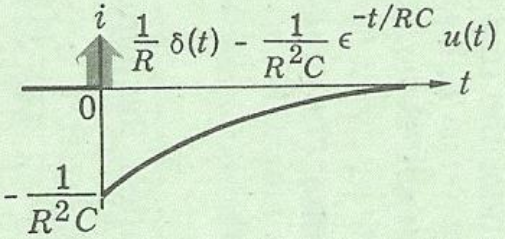
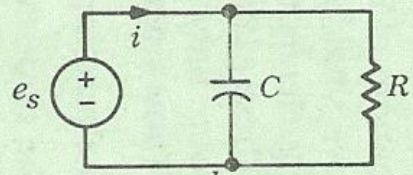 $i = C\frac{de_s}{dt} + \frac{1}{R}e_s$	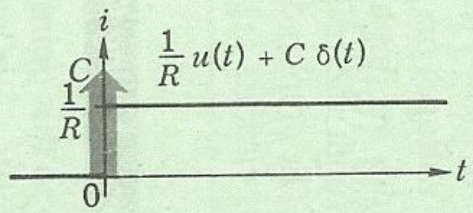	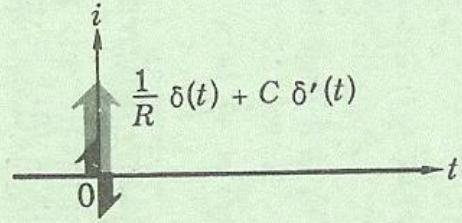
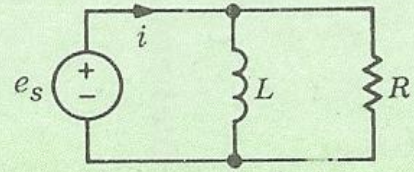 $i = \frac{1}{R}e_s + \frac{1}{L}\int_0^t e_s(t')\,dt'$	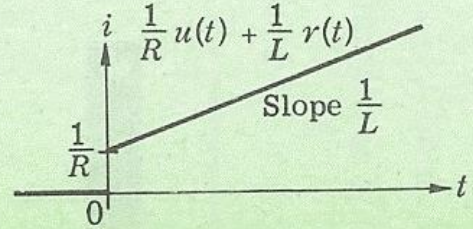	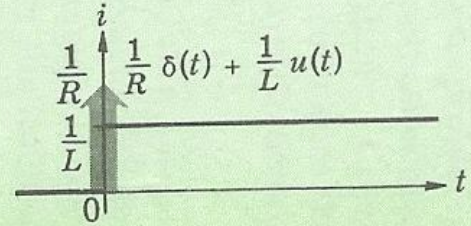

Time-varying Circuits and Nonlinear Circuits

If the first –order circuits are linear (time invariant or time varying), then

1. The zero-input response is a linear function of the initial state
2. The zero-state response is a linear function of the input
3. The complete response is the sum of the zero-input response and of the zero-state response

We have also seen that if the circuit is linear and time invariant, then

1. $$\mathcal{Z}_0\left[\mathcal{F}_\tau(i_\tau)\right] = \mathcal{F}_\tau\left[\mathcal{Z}_0(i)\right] \quad \tau \geq 0$$

which means that the zero-state response (starting in the zero state at time zero) to the shifted input is equal to the shift of the zero-state response (starting also in the zero state at time zero) to the original input.

2. The impulse response is the derivative of the step response

For time-varying circuit sand nonlinear circuits the analysis problem is in general difficult and there is no general methods except numerical solutions.

Example 1

Consider the parallel RC circuit presented in Fig.7.20

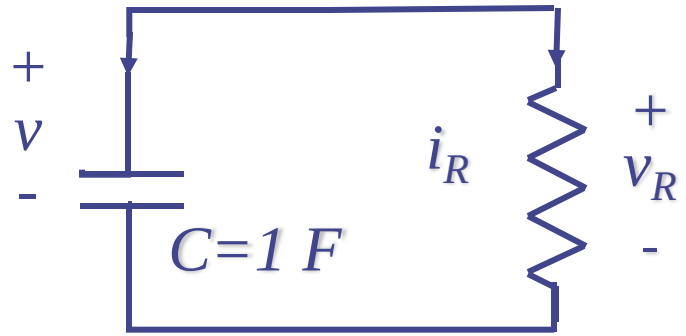

Fig.7.20

Summary

- A lumped circuit is said to be linear if each of its element is either a linear element or an independent source. A lumped circuit is said to be time invariant if each of its elements is ether time –invariant or an independent source
- The zero-input response of a circuit is defined to be response of the circuit when no input is applied to it; thus, the zero-input response is due to the initial state only
- The zero-state response of a circuit is defined to be a response of the circuit due to an input applied at some time, say t_0, subject to the condition that the circuit be in the zero state just prior to the application of the input (that is, at time t_{0-}); thus the zero-state response is due to the input only
- The step response is defined to be zero-state response due to a unit step input

- The impulse response is defined to be the zero-state response due to a unit impulse
- For a linear first-order circuits we have shown that
  1. The zero-input response is a linear function of the initial state
  2. The zero-state response is a linear function of the input
  3. The complete response is the sum of the zero-input response and of the zero-state response

1. $$\mathcal{Z}_0\left[\mathcal{F}_\tau(i_\tau)\right] = \mathcal{F}_\tau\left[\mathcal{Z}_0(i)\right] \quad \tau \geq 0$$

which means that the zero-state response (starting in the zero state at time zero) to the shifted input is equal to the shift of the zero-state response (starting also in the zero state at time zero) to the original input.

2. The impulse response is the derivative of the step response

Lecture 8

- **Second order circuits (i).**
- Linear time invariant *RLC*-circuits,
  - zero-input response.
  - Energy and Q factor
- Linear time invariant *RLC*-circuits, zero-state response
  - Step response,
  - Impulse response
- The State-space approach
  - state equations and trajectory,
  - matrix representation,
  - approximate method for the calculation of trajectory,
  - state equations and complete response

Linear Time-invariant *RLC* Circuit, Zero-input response

In Fig. 8.1 we have a parallel connection of three linear time invariant and passive elements: a resistor, an inductor, and a capacitor. Their branch equations are

$$v_R = Ri_R \qquad \text{or} \qquad i_R = Gv_R \tag{8.1}$$

$$v_L = L\frac{di_L}{dt} \qquad i_L(0) = I_0 \qquad \text{or} \qquad i_L(t) = I_0 + \frac{1}{L}\int_0^t v_L(t')dt' \tag{8.2}$$

$$v_C(t) = V_0 \frac{1}{C}\int_0^t i_C(t')dt' \quad \text{or} \quad i_C = C\frac{dv_C}{dt} \qquad v_C(0) = V_0 \tag{8.3}$$

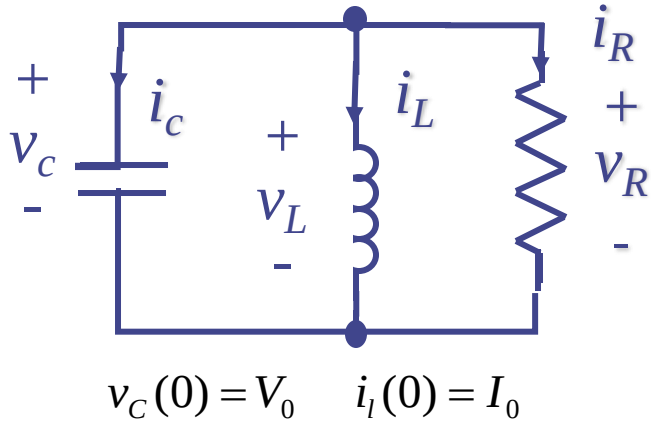

where R, G, L, and C are positive numbers representing respectively, the resistance, conductance, inductance and capacitance. I_0 represents the initial current in the inductor, and V_0 represents the initial voltage across the capacitor.

Fig. 8.1 Parallel RLC circuit; the three elements are linear time invariant and passive

From KVL we have

$$v_C = v_R = v_L \tag{8.4}$$

and from KCL we have

$$i_C + i_R + i_L = 0 \tag{8.5}$$

Altogether we have six equations. This leads us to expect that the six unknown network variable can be uniquely determined.

Let us use the capacitor voltage v_c as the most convenient variable. Using Eqs. (8.1) to (8.5) we obtain the following integrodifferential equation in terms of the voltage v_c:

$$C\frac{dv_c}{dt} + Gv_c + I_0 + \frac{1}{L}\int_0^t v_c(t')dt' = 0 \tag{8.6}$$

and

$$v_c(0) = V_0 \tag{8.7}$$

Once the voltage v_c is obtained, the five other network variables can be found from Eqs.(8.1) to (8.4). An alternate approach is to choose the inductor current i_L as the variable. If we use the branch equations for the capacitor, we obtain from (8.5)

$$C\frac{dv_c}{dt} + Gv_c + i_L = 0$$

Since in (8.4) $v_c = v_R = v_L$, the above equation becomes

$$C\frac{dv_L}{dt} + Gv_L + i_L = 0 \tag{8.8}$$

Now we use the branch equation for the inductor to obtain the following second-order differential equation with i_L as the dependent variable:

$$LC\frac{d^2 i_L}{dt^2} + GL\frac{di_L}{dt} + i_L = 0 \tag{8.9}$$

The necessary initial conditions are

$$i_L(0) = I_0 \tag{8.10}$$

and

$$\frac{di_L}{dt}(0) = \frac{v_L(0)}{L} = \frac{v_c(0)}{L} = \frac{V_0}{L} \qquad (8.11)$$

The differential equation (8.9) with initial conditions (8.10) and (8.11) has a unique solution i_L. Once the current i_L is obtained, we can find the five other network variables from Eqs. (8.1) to (8.5). Let us find i_L form Eqs. (8.9) to (8.11). Since no source is driving the circuit, the response i_L is the *zero-input response*.

For convenience in manipulation let us define two parameters α and ω_0 as

$$\alpha = \frac{G}{2C} \qquad \omega_0 = \frac{1}{\sqrt{LC}} \qquad (8.12)$$

The parameter α is called the *dumping constant*, and the parameter ω_0 (in radians per second) is called the (angular) *resonant frequency*. $\omega_0 = 2\pi f_0$, where f_0 (in hertz) is the resonant frequency of the inductor and the capacitor. These two α and ω_0 parameters characterize the behavior of the RLC circuit. Dividing Eq.(8.9) by LC, we obtain

$$\frac{d^2 i_L}{dt^2} + 2\alpha \frac{di_L}{dt} + \omega_0^2 i_L = 0 \qquad (8.13)$$

This is the second-order homogeneous differential equation with constant coefficients. The characteristic polynomial for this differential equation is

$$s^2 + 2as + \omega_0^2 \qquad (8.14)$$

The zeros of the characteristic polynomial are called the characteristic roots or, better, the natural frequencies of the circuit; they are

$$\left.\begin{matrix} s_1 \\ s_2 \end{matrix}\right\} = -\alpha \pm \sqrt{\alpha^2 - \omega_0^2} = \begin{cases} -\alpha + \alpha_d \\ -\alpha - \alpha_d \end{cases} \qquad (8.15)$$

where

$$\alpha_d = \sqrt{\alpha^2 - \omega_0^2}$$

The form of the zero-input response of the circuit depends upon the relative values of α and ω_0 . According to the relative values of α and ω_0 ,we can classify the zero-input response into four classes:

- overdumped,
- critically dumped,
- underdamped
- losses

The first three cases give waveforms $i_L(\cdot)$ that are some forms of damped exponentials, whereas the last case corresponds to a sinusoidal waveform.

1. Overdamped ($\alpha > \omega_0$). The two natural frequencies s_1 and s_2 are equal and negative. The response is the sum of two damped exponentials

$$i_L(t) = k_1 e^{s_1 t} + k_2 e^{s_2 t} \qquad (8.16)$$

where the constants k_1 and k_2 depend on the initial conditions.

2. Critically damped ($\alpha = \omega_0$). The two natural frequencies are equal and real; that is, $s_1 = s_2 = \alpha$. The response is

$$i_L(t) = (k + k't)e^{-\alpha t} \qquad (8.17)$$

where k and k' are constants that depend upon the initial conditions

3. Underdamped ($\alpha < \omega_0$). The two natural frequencies are complex conjugate ($s_1 = -\alpha + j\omega_d$, and $s_2 = -\alpha - j\omega_d$, where $\omega_d^2 = \omega_0^2 - \alpha^2$). The response is of the form

$$i_L(t) = ke^{-\alpha t}\cos(\omega_d t + \theta) \qquad (8.18)$$

where k and θ are real constants that depend upon the initial conditions. A typical plot of the waveform $i_L(\cdot)$ is shown in Fig 8.2. where the exponential curves are called envelops. Note that the peaks of the waveform in amplitude according to the damped exponential envelopes.

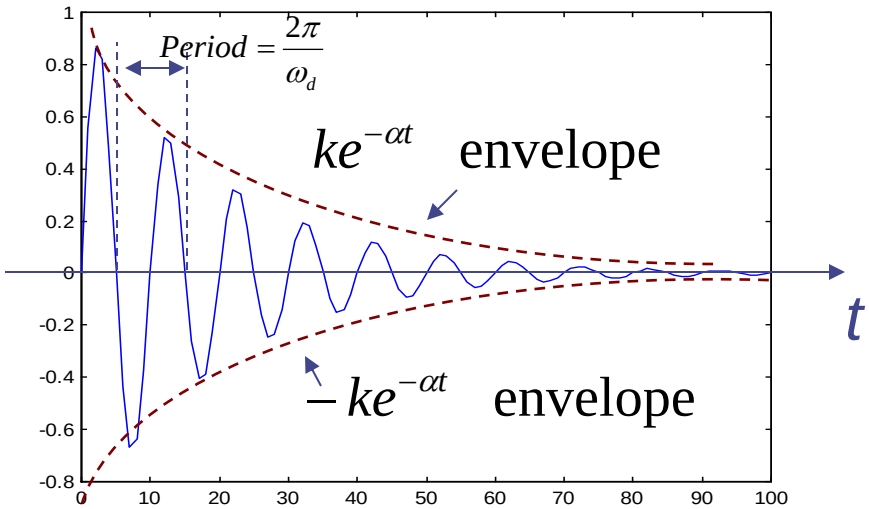

Fig.8.2 Waveform $i_L(\cdot)$ for the underdamped case ($\alpha < \omega_0$) of the parallel RLC circuit.

4. Lossless (α=0, hence G=0). The two natural frequencies are imaginary ($s_1=j\omega_0$, and $s_2= -j\omega_0$). The response is

$$i_L(t) = k\cos(\omega_0 t + \theta) \qquad (8.19)$$

where k and θ are real constants that depend upon the initial conditions.

The four cases can also be classified in terms of natural frequencies, i.e., the two roots s_1 and s_2 of the characteristic polynomial of the differential equation. Since natural frequencies can be real, complex, or imaginary, it is instructive to locate them in the complex plane, called the *complex frequency plane.*

In the complex frequency plane (*s plane*), the horizontal axis represents the real part, and the vertical axis represents, the imaginary part. The four cases are illustrated in Fig. 8.3, where the location of the natural frequencies is plotted in the s plane on the left, and the corresponding waveform $i_L(\cdot)$ is plotted on the right.

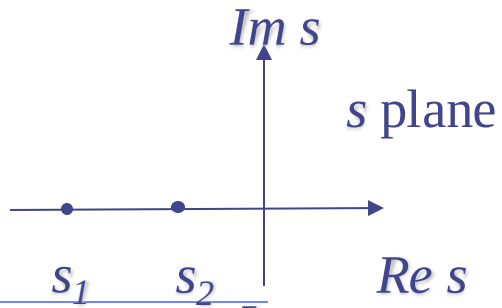

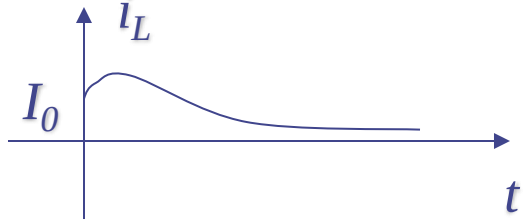

(a) Overdamped $\alpha > \omega_0$

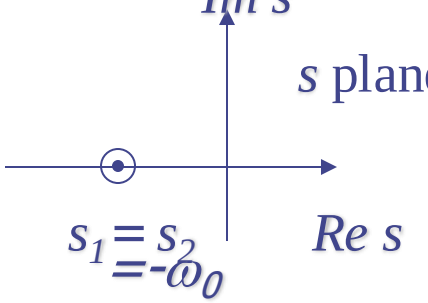

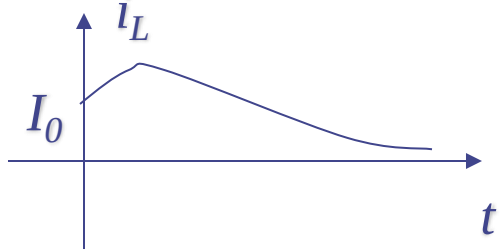

(b) Critically damped ($\alpha = \omega_0$)

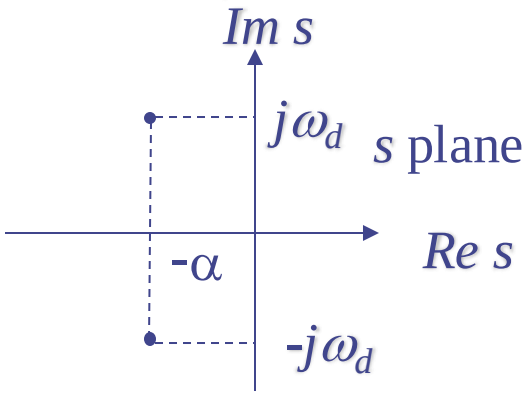

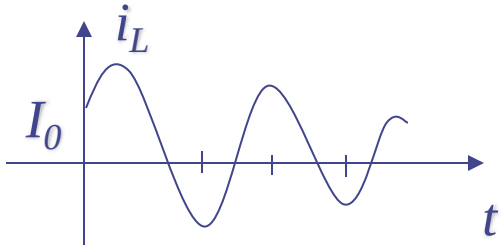

(c) Underdamped ($\alpha < \omega_0$)

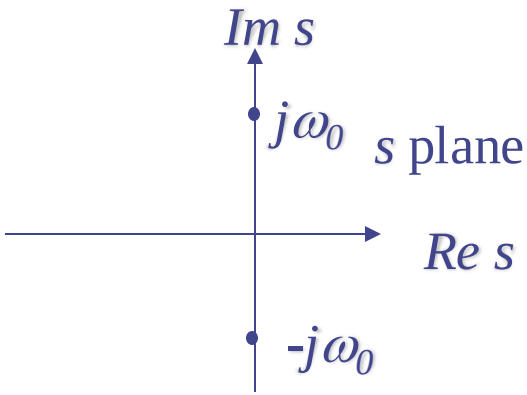

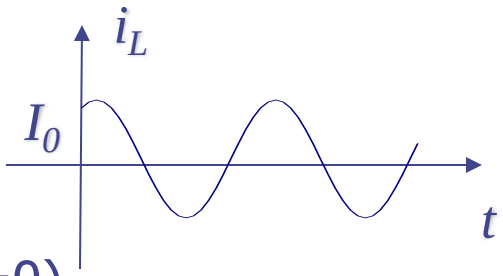

(d) Lossless (α=0)

Exercise

The solution of the homogeneous differential equation (8.13) for the underdamped case can also written as

$$i_L(t) = k_1 e^{s_1 t} + k_2 e^{s_2 t}$$

where s_1, s_2, k_1 and k_2 are complex numbers, and

$$s_2 = \bar{s}_1 = -\alpha - j\omega_d \qquad k_2 = \bar{k}_1$$

The bars denote the complex conjugate. Derive Eq.(8.18) from the above and show that

$$k = 2|k_1| \text{ and } \theta = \angle k_1$$

Evaluation of arbitrary constants

Let us consider the overdamped case. The current i_L is given by (8.16) as

$$i_L(t) = k_1 e^{s_1 t} + k_2 e^{s_2 t}$$

We wish to determine the constants k_1 and k_2 from the initial conditions

specified in Eqs (8.10) and (8.11). Evaluating $i_L(t)$ in (8.16) at t=0, we obtain

$$i_L(0) = k_1 + k_2 = I_0 \tag{8.20}$$

Differentiating (8.16) and evaluating the derivative at t=0, we obtain

$$\frac{di_L}{dt}(0) = k_1 s_1 + k_2 s_2 = \frac{V_0}{L} \tag{8.21}$$

Solving for k_1 and k_2 in Eqs.(8.20) and (8.21), we obtain

$$k_1 = \frac{1}{s_1 + s_2}\left(\frac{V_0}{L} - s_2 I_0\right) \tag{8.22}$$

and

$$k_2 = \frac{1}{s_2 - s_1}\left(\frac{V_0}{L} - s_1 I_0\right) \tag{8.23}$$

Substituting k_1 and k_2 in (8.16), we obtain a general expression of the current waveform $i_L(\cdot)$ in terms of the initial stat of the circuit, i.e., the initial current I_0 in the inductor and the initial voltage V_0 across the capacitor. Thus

$$i_L(t) = \frac{V_0}{(s_1 - s_2)L}\left(e^{s_1 t} - e^{s_2 t}\right) + \frac{I_0}{s_1 - s_2}\left(s_1 e^{s_2 t} - s_2 e^{s_1 t}\right) \qquad (8.24)$$

The voltage v_c across the capacitor can be calculated from i_L since $v_c = v_L$ and $v_L = L di_L/dt$. Thus

$$v_c(t) = \frac{V_0}{s_1 - s_2}\left(s_1 e^{s_1 t} - s_2 e^{s_2 t}\right) + \frac{LI_0 s_1 s_2}{s_1 - s_2}\left(e^{s_2 t} - e^{s_1 t}\right) \qquad (8.25)$$

Similarly, we can derive, for underdamped case, the inductor current and the capacitor voltage as

$$i_L(t) = \frac{V_0}{\omega_d L} e^{-\alpha t} \sin \omega_d t + I_0 e^{-\alpha t}\left(\cos \omega_d t + \frac{\alpha}{\omega_d} \sin \omega_d t\right) \qquad (8.26)$$

$$v_C(t) = V_0 e^{-\alpha t}\left(\cos \omega_d - \frac{\alpha}{\omega_d} \sin \omega_d t\right) - \frac{L\omega_0^2}{\omega_d} I_0 e^{-\alpha t} \sin \omega_d t \qquad (8.27)$$

Exercise 1

Prove the formula in Eqs. (8.26) and (8.27).

Exercise 2

Show that for the lossless case the inductor current and the capacitor voltage are given by

$$i_L(t) = \frac{V_0}{\omega_0 L}\sin\omega_0 t + I_0\cos\omega_0 t \qquad (8.28)$$

$$v_C(t) = V_0\cos\omega_0 - \omega_0 L I_0\sin\omega_0 t \qquad (8.29)$$

Exercise 3

Given I_0=1 amp and V_0=1 volt, determine the zero-input responses and plot the waveforms $i_L(\cdot)$ and $v_C(\cdot)$ vs t or each of the following RLC circuit:

a) R=1 Ω, L=1 henry, and C=1 farad

b) R=1 Ω, L=4 henrys, and C=0.25 farad

c) R=∞, L=4 henrys, and C=1 farad

Energy and Q factor

Recall that the initial state is given by the initial current I_0 in the inductor and the initial voltage V_0 across the capacitor at $t=0$. Thus, the initial stored energy is the sum of $\frac{1}{2}LI_0^2$ (in the magnetic field) and $\frac{1}{2}CV_0^2$ (in the electric field).

Let us consider the underdamped case. As time proceeds, the energy is being transferred back and both from the capacitor to the inductor. Meanwhile the resistor dissipates part of the energy into heat as oscillations goes on. Thus the total energy left in the electric and magnetic fields gradually diminishes. For $R=\infty$, the current in the resistor is always zero, and there is no energy loss; hence we have a sustained oscillation.

The parameter ω_0 is related to the frequency of the damped oscillation, $\omega_d = \sqrt{\omega_0^2 - \alpha^2}$, whereas the parameter α determines the rate of exponential decaying. The relative damping in a damped oscillation is the often characterized by a number Q, defined by

$$Q = \frac{\omega_0}{2\alpha} = \frac{\omega_0 C}{G} = \frac{R}{\omega_0 L} = \frac{R}{\sqrt{L/C}} \qquad (8.30)$$

Q can be considered as a quality factor of a physical resonant circuit. The less damping, the larger Q. For the parallel RLC circuit, to decrease the damping we must to increase the resistance. A lossless resonant circuit has zero damping or infinite Q.

The four cases we have studied can also be classified according to the value of Q. The overdamped case has a $Q<1/2$, the critically damped case has $Q=1/2$, the underdamped case has $Q>1/2$, and the lossless case has a $Q=\infty$. In Fig.8.4 the values of Q are related to the locations of a natural frequencies in the four cases.

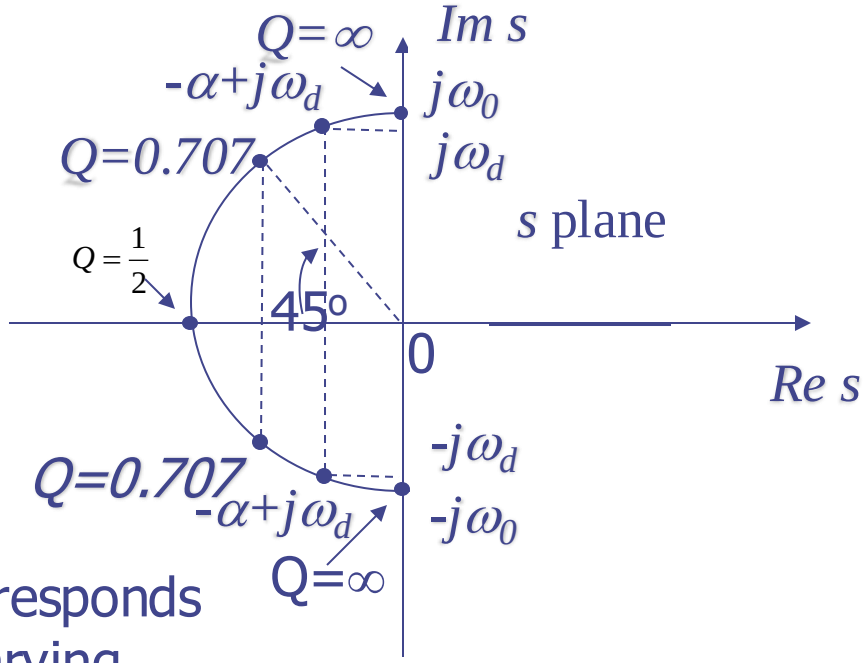

Fig. 8.4. Locus of the natural frequencies of the four cases; in the characteristic equation

$$s^2 + 2as + \omega_0^2 = s^2 + (\omega_0 / Q)s + \omega_0 = 0$$

The resonant frequency $\omega_0 = 1/\sqrt{LC}$ is kept constant and Q varies. This corresponds to a circuit with L and C fixed and R varying

Linear time invariant *RLC*-circuits, zero-state response

Let us continue with the same linear time-invariant parallel RLC circuit to illustrate the computation and properties of the zero state response

By zero-state response we mean the response of a circuit due to an input applied at some arbitrary time t_0 subject to the condition that the circuit is in the zero state at t_0-.

KCL for the circuit in Fig. 8.5 gives

$$i_C + i_R + i_L = i_s \tag{8.31}$$

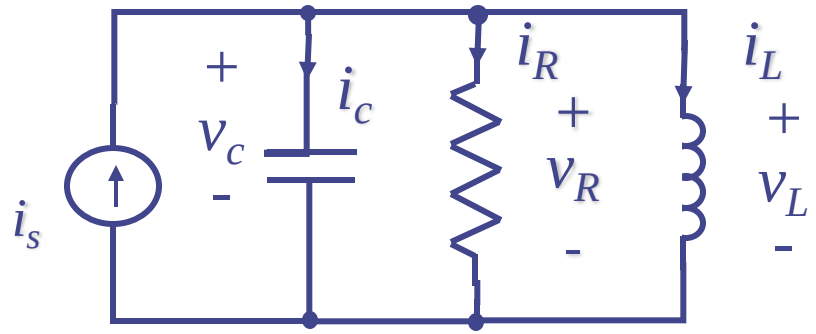

Fig. 8.5 Parallel RLC circuit with current source as input

Following the same procedure that in previous section we obtain the network equation in terms of inductor current i_L. Thus

$$LC\frac{d^2 i_L}{dt^2} + GL\frac{di_L}{dt} + i_L = i_s(t) \quad t \geq 0 \tag{8.32}$$

and

$$i_L(0-) = 0 \tag{8.33}$$

$$\frac{di_L}{dt}(0-) = \frac{v_C(0-)}{L} = 0 \tag{8.34}$$

The three equations above correspond to Eqs.(8.9), (8.10) and (8.11) of the previous section. The differences are that previously the input was zero and the initial conditions were nonzero and presently the forcing function is $i_s(t)$ as in (8.32) and the initial conditions are zero as given by (8.33) and (8.34). We remember that the solution of a linear nonhomogeneous differential equation with constant coefficients is the sum of two terms; that is

$$i_L = i_h + i_p \tag{8.35}$$

where i_h is a solution of the homogeneous differential equation, that is Eq. (8.32) with $i_s=0$ and i_p as a particular solution of the nonhomogeneous differential equation . For our problem i_h has been calculated in the previous section since it is the zero-input response; recall that it contains two arbitrary coefficients. Except for the critically damped case, i_h can be written in the form

$$i_h(t) = k_1 e^{s_1 t} + k_2 e^{s_2 t} \tag{8.36}$$

If the natural frequencies are complex, then

$$s_2 = \bar{s}_1 = -\alpha - j\omega_d \qquad k_2 = \bar{k}_1 \tag{8.37}$$

and i_h can also be written as

$$i_h = |k_1| e^{-\alpha t} \cos(\omega_d t + \angle k_1) \tag{8.38}$$

On the other hand, i_p depends upon the input. It is convenient to pick i_p to be a constant if the input is a step function and to be a sinusoid if the input is a sinusoid.

Step Response

Let us calculate the step response of the parallel RLC circuit shown in Fig.8.5. By definition the input is a unit step, and the initial conditions are zero; hence from Eqs.(8.32) to (8.34) we have

$$LC\frac{d^2 i_L}{dt^2} + GL\frac{di_L}{dt} + i_L = u(t) \tag{8.39}$$

$$i_L(0) = 0 \tag{8.40}$$

$$\frac{di_L}{dt}(0) = 0 \tag{8.41}$$

The most convenient particular solution of (8.39) is

$$i_p(t) = 1 \quad \text{for} \quad t \geq 0 \tag{8.42}$$

Therefore, the general solution is of the form

$$i_L(t) = k_1 e^{s_1 t} + k_2 e^{s_2 t} + 1 \tag{8.43}$$

if the natural frequencies are distinct, and

$$i_L(t) = (k + k't)e^{-\alpha t} + 1 \tag{8.44}$$

if they are equal.

Let us determine the constants k_1 and k_2 in (8.43) using the initial conditions (8.40) and (8.41). At t=0, Eqs. (8.40) and (8.43) yield

$$i_L(0) = k_1 + k_2 + 1 = 0 \tag{8.45}$$

Differentiating (8.43) and evaluating the derivative at t=0, we obtain

$$\frac{di_L}{dt}(0) = k_1 s_1 + k_2 s_2 = 0 \tag{8.46}$$

Solving the two equations above for k_1 and k_2 , we have

$$k_1 = \frac{s_2}{s_1 - s_2} \quad \text{and} \quad k_2 = \frac{-s_1}{s_1 - s_2} \tag{8.47}$$

The unit step response is therefore

$$i_L(t) = \left[\frac{1}{s_1 - s_2} \left(s_2 e^{s_1 t} - s_1 e^{s_2 t} \right) + 1 \right] u(t) \tag{8.48}$$

In the underdamped case the natural frequencies are complex; thus,

$$\left.\begin{matrix} s_1 \\ s_2 \end{matrix}\right\} = -\alpha \pm j\omega_d$$

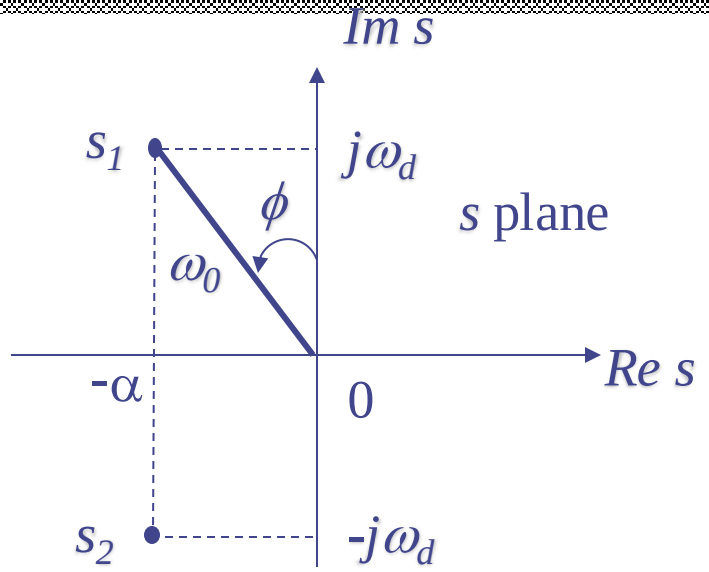

Fig. 8.6 Representing natural frequencies

or in polar coordinates (See Fig. 8.6)

$$\left.\begin{matrix} s_1 \\ s_2 \end{matrix}\right\} = \omega_0 e^{\pm j(\pi/2+\phi)}$$

where

$$|s_1| = |s_2| = \sqrt{\alpha^2 + \omega_d^2} = \omega_0 \quad \text{and} \quad \phi = \tan^{-1}\frac{\alpha}{\omega_d} \tag{8.49}$$

The first term in (8.48) can be expressed as follows:

$$\frac{1}{s_1 - s_2}\left(s_2 e^{s_1 t} - s_1 e^{s_2 t}\right) = \frac{1}{2j\omega_d}\omega_0 e^{-\alpha t}\left(e^{j(\omega_d t - \pi/2 - \phi)} - e^{-j(\omega_d t - \pi/2 - \phi)}\right)$$

$$= \frac{\omega_0}{2j\omega_d} e^{-\alpha t} 2j \sin\left(\omega_d t - \frac{\pi}{2} - \phi\right) \tag{8.50}$$

$$= -\frac{\omega_0}{\omega_d} e^{-\alpha t} \cos(\omega_d t - \phi)$$

The unit response becomes

$$i_L(t) = \left[-\frac{\omega_0}{\omega_d} e^{-\alpha t} \cos\left(\omega_d t - \phi\right) + 1 \right] u(t) \qquad (8.51)$$

Typical plots of the step response for the overdamped and the underdamped cases are given in Fig.8.7

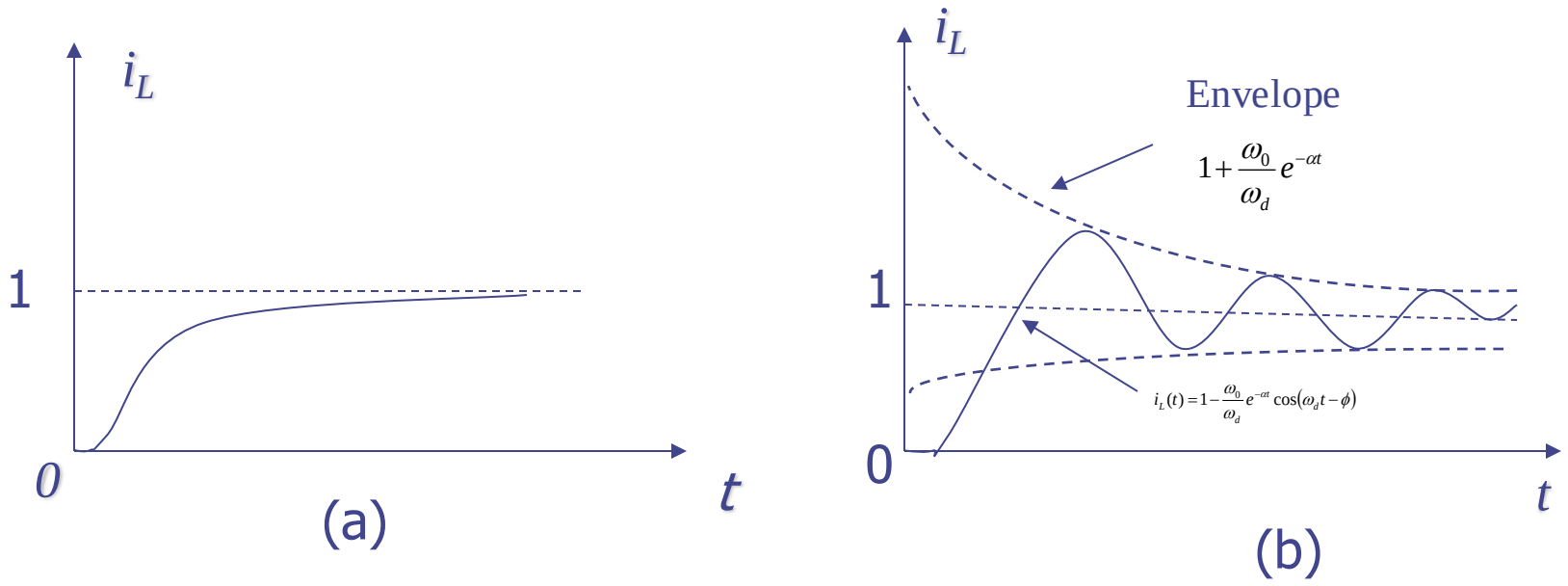

Fig. 8.7 Step response for the inductor current of the parallel RLC circuit. (a) Overdamped; (b) underdamped.

It is practical to separate the step response into two parts; the term that is either a damped exponential or a damped sinusoid represents the *transient*, and the constant term equal to unity is the *steady state*. In both cases, the current i_L starts at zero and reaches unity at $t=\infty$.

The voltage across the capacitor of the parallel RLC circuit can be determined immediately by calculating Ldi_L/dt. Thus,

$$v_c(t) = L\frac{s_1 s_2}{s_1 - s_2}\left(e^{s_2 t} - e^{s_1 t}\right)u(t) \tag{8.52}$$

and for the underdamped case

$$v_C(t) = u(t)\sqrt{\frac{L}{C}}\frac{\omega_0}{\omega_d}e^{-\alpha t}\sin\omega_d t \tag{8.53}$$

These are plotted in Fig.8.8. In this case the *steady state* is identically zero. Eventually all the current from the source goes through the inductor, and since the current is constant, the voltage across the inductor is identically zero.

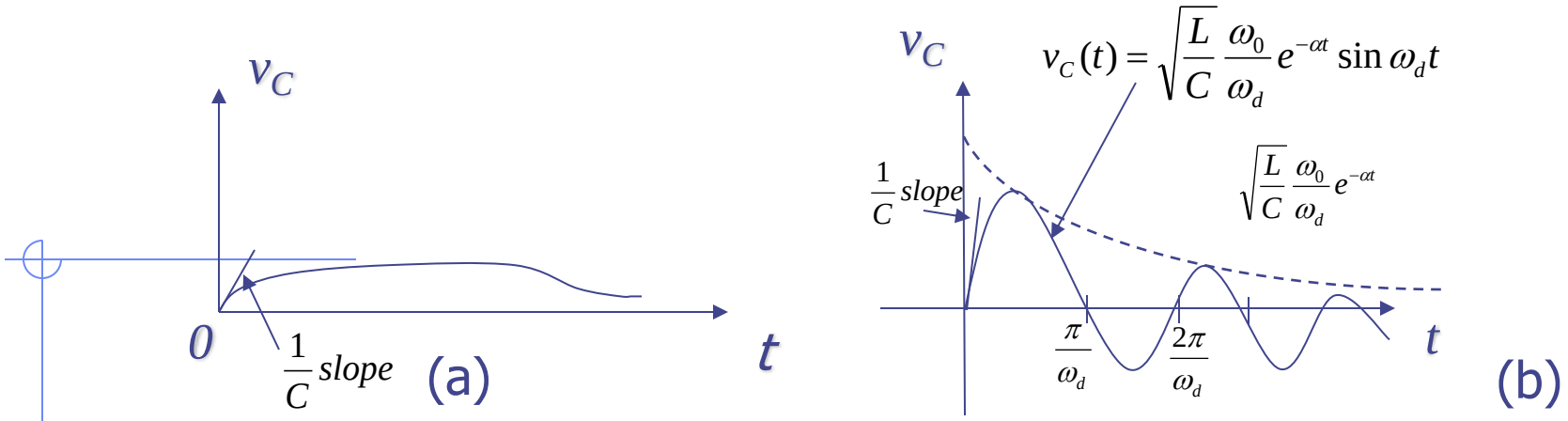

Fig.8.8 Step response for the capacitor voltage of the parallel RLC circuit

Physical interpretation

With the parallel *RLC* circuit in the zero state, a constant current source is applied in parallel to the circuit. Clearly, the voltage across the capacitor and the current through the inductor cannot change instantaneously, so they stay at zero immediately after the input is applied. This implies that initially the current in the resistor must also be zero, since the voltage $v_R(0)=v_C(0)=0$. Thus, at t=0 all the current from the source goes through the capacitor, which causes a gradual rise of the voltage. At $t=0+$ *the capacitor acts as a short circuit to a suddenly applied finite constant current source*.

As time progresses, the voltage across the capacitor increases, and the current will flow in both the resistor and inductor. after a long time the circuit reaches a steady state, that is

$$\frac{di_L}{dt} = 0 \quad \frac{d^2 i_L}{dt^2} = 0$$

Hence, according to Eq. (8.32), all current from the source goes through the inductor. Therefore, the voltage across the parallel circuit is zero because the current in the resistor is zero. At $t=\infty$ the inductor acts as a short circuit to a constant current source.

Exercise

For the parallel RLC circuit with $R=1\Omega$, C=1 farad, and L=1 henry, determine the currents in the inductor, the capacitor and the resistor as a result of an input step of current of 1 amp. The circuit is in the zero state at t=0-. Plot the waveforms.

Impulse Response

Let us calculate the impulse response for the parallel *RLC* circuit. By definition, the input is a unit impulse, and the circuit is in the zero state at *0-*; hence, the impulse response i_L is the solution of

$$LC\frac{d^2 i_L}{dt^2} + GL\frac{di_L}{dt} + i_L = \delta(t) \tag{8.54}$$

$$i_L(0-) = 0 \tag{8.55}$$

$$\frac{di_L}{dt}(0-) = 0 \tag{8.56}$$

First method

We use the differential equation directly. Since the impulse function $\delta(t)$ is identically zero for $t>0$, we can consider the impulse response as a zero-input response starting at $t=0+$. The impulse at $t=0$ creates an initial condition at $t=0+$, and the impulse response for $t>0$ is essentially the zero-input response due to the initial condition. The problem then is to determine this initial condition.

Let us integrate both sides of Eq.(8.54) from $t=0-$ to $t=0+$. We obtain

$$LC\frac{di_L}{dt}(0+)-LC\frac{di_L}{dt}(0-)+LGi_L(0+)-LGi_L(0-)+\int_{0-}^{0+}i_L(t')dt'=1 \qquad (8.57)$$

where the right-hand side is obtained by using the fact that

$$\int_{0-}^{0+}\delta(t')dt'=1$$

We know that i_L cannot jump at $t=0$, or equivalently, that i_L is a continuous function; that is

$$\int_{0-}^{0+}i_L(t')dt'=0 \quad \text{and} \quad i_L(0+)=i_L(0-)$$

If it were not continuous, di_L/dt would contain an impulse d^2i_L/dt^2 would contain a doublet, and (8.54) could never be satisfied since there is no doublet on the right-hand side. From (8.57) we obtain

$$\frac{di_L}{dt}(0+)=\frac{di_L}{dt}(0-)+\frac{1}{LC}=\frac{1}{LC} \qquad (8.58)$$

as far as t>0 is concerned, the nonhomogeneous differential equation (8.54) , with the initial condition given in (8.55) and (8.56), is equivalent to

$$LC\frac{d^2 i_L}{dt^2} + GL\frac{di_L}{dt} + i_L = 0 \tag{8.59}$$

with

$$i_L(0+) = 0 \tag{8.60}$$

and

$$\frac{di_L}{dt}(0+) = \frac{1}{LC} \tag{8.61}$$

For $t \le 0$, clearly, $i_L(t)$ is zero. The solution of the above is therefore

$$i_L(t) = u(t)\frac{\omega_0^2}{\omega_d} e^{-\alpha t} \sin \omega_d t \tag{8.62}$$

The waveform is shown in Fig. 8.9a. Note that (8.62) can also be obtained from the zero-input response (8.26) for a given initial state $I_0=0$ and $V_0=1/C$.

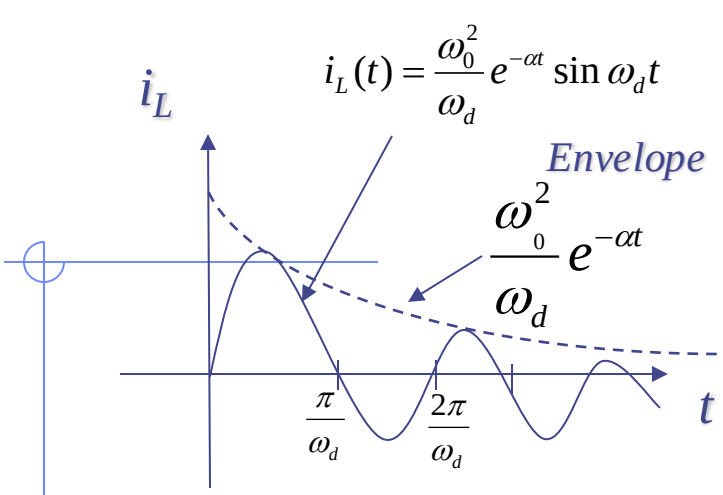

(a)

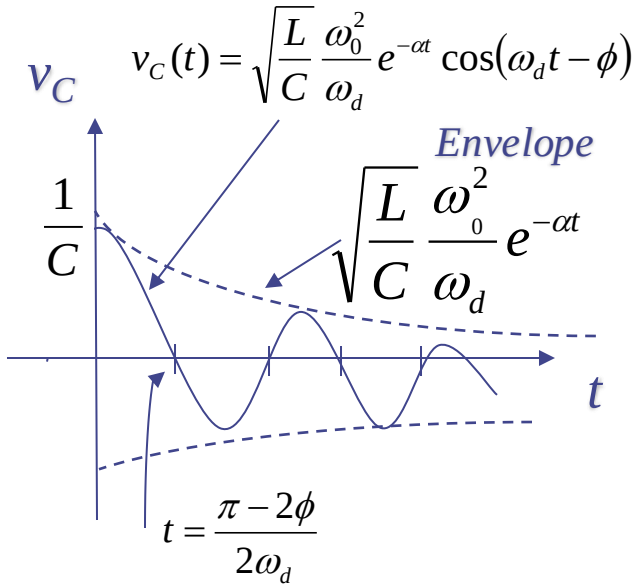

(b)

Fig.8.9 Impulse response of the parallel *RLC* circuit for the underdamped case (*Q*<1/2)

Remark

Consider the parallel connection of the capacitor and the current source i_s. In Lecture 3, we showed that the parallel connection is equivalent to the series connection of the same capacitor and a voltage source v_s, where

$$v_s(t) = \frac{1}{C} \int_{0-}^{t} i_s(t')dt' \quad t \geq 0$$

Thus for an impulse current source, the equivalent voltage source is $(1/C)u(t)$. For $t<0$, the voltage source is identically zero, and for $t>0$, the voltage source is a constant $1/C$. The series connection to a charged capacitor with initial voltage $1/C$. Therefore, the impulse response of a parallel RLC circuit due to a current impulse in parallel is the same as a zero-input response with $v_C(0+)=1/C$. These equivalence are illustrated in Fig.8.10.

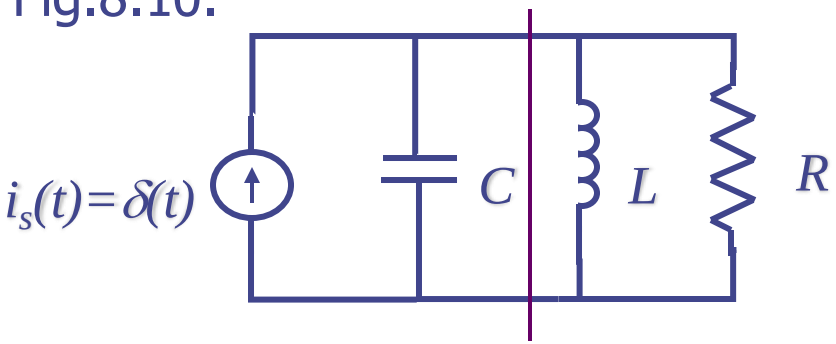

(a)

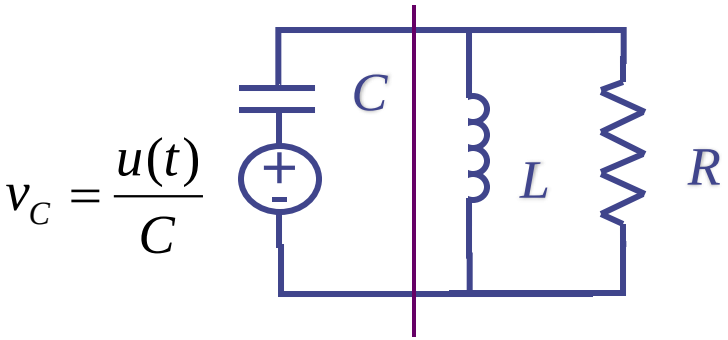

(b)

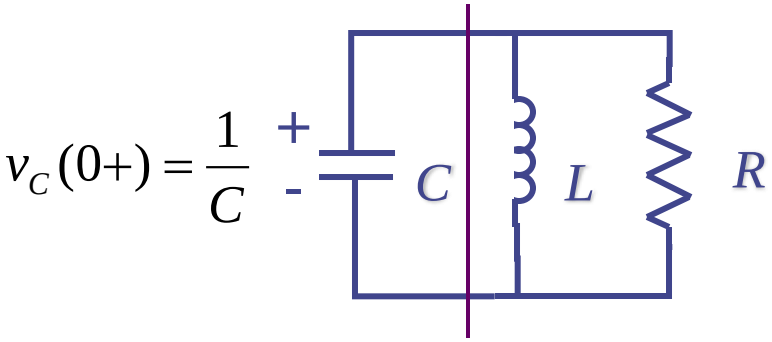

(c)

Fig.8.10 The problem of the impulse response of a parallel RLC circuit is reduced to that of the zero-input response of an RLC circuit

Direct substitution

Let us verify by direct substitution into Eqs.(8.54) to (8.56) that (8.62) is the solution. This is a worthwhile exercise for getting familiar with manipulations involving impulses. First, i_L as given by (8.62) clearly satisfies the initial conditions of (8.55) and (8.56); that is, $i_L(0-)=0$ and $(di_L/dt)(0-)=0$. It remains for us to how that (8.62) satisfies the differential equation (8.54). Differentiating (8.62), we obtain

$$\frac{di_L}{dt} = \delta(t)\left(\frac{\omega_0^2}{\omega_d} e^{-\alpha t} \sin \omega_d t\right) + \frac{u(t)\omega_0^3}{\omega_d} e^{-\alpha t} \cos(\omega_d t + \phi) \qquad (8.63)$$

Now the first term is of the form $\delta(t)f(t)$. Since is $\delta(t)$ zero whenever $t \neq 0$, we may set t=0 in the factor and obtain $\delta(t)f(0)$; however $f(0)=0$. Hence the first term in (8.63) disappears and

$$\frac{di_L}{dt} = \frac{u(t)\omega_0^3}{\omega_d} e^{-\alpha t} \cos(\omega_d t + \phi) \qquad (8.64)$$

Differentiating again, we obtain

$$\frac{d^2 i_L}{dt^2} = \delta(t)\frac{\omega_0^3}{\omega_d}\cos\phi - u(t)\frac{\omega_0^4}{\omega_d}e^{-\alpha t}\sin(\omega_d t + 2\phi)$$

$$= \omega_0^2\delta(t) - u(t)\frac{\omega_0^4}{\omega_d}e^{-\alpha t}\left[\sin(\omega_d t + \phi)\cos\phi + \cos(\omega_d t + \phi)\sin\phi\right] \quad (8.65)$$

Substituting (8.62), (8.64) and (8.65) in (8.54), which is rewritten below in terms of ω_0 and α,

$$\frac{1}{\omega_0^2}\frac{d^2 i_L}{dt^2} + \frac{2\alpha}{\omega_0^2}\frac{di_L}{dt} + i_L = \delta(t)$$

we shall see that the left-hand side is equal to $\delta(t)$ as it should be.

Exercise Show that the impulse response for the capacitor voltage of the parallel RLC circuit is

$$v_C(t) = u(t)\sqrt{\frac{L}{C}}\frac{\omega_0^2}{\omega_d}e^{-\alpha t}\cos(\omega_d t - \phi) \quad (8.66)$$

The waveform is shown in Fig.8.9b.

Second method

We use the relation between the impulse response and the step response. This method is applicable only to circuits with linear time-invariant elements for it is only for such circuits that the impulse response is the derivative of the step response.

Exercise Show that the impulse response for i_L in Eq.(8.62) and v_C in (8.66) are obtainable by differentiating the step response for i_L in (8.51) and v_C in (8.53)

Physical interpretation

Let us use the pulse input $i_s(t) = p_\Delta(t)$ as shown in Fig. 8.11a to explain the behavior of all the branch currents and voltages in the parallel RLC circuit. Remember that as $\Delta \to 0$, pulse p_Δ approaches an impulse, and the response approaches the impulse response. To start with, we assume Δ is finite and positive but very small. At t=0+ all the current from the source goes into the capacitor; that is, $i_C(0+)=i_s(0+)=1/\Delta$, and $i_R(0+)=i_L(0+)=0$.

The current in the capacitor forces a gradual rise of the voltage across it at an initial rate of $(dv_C/dt)(0+) = i_C(0+)/C = 1/\Delta C$

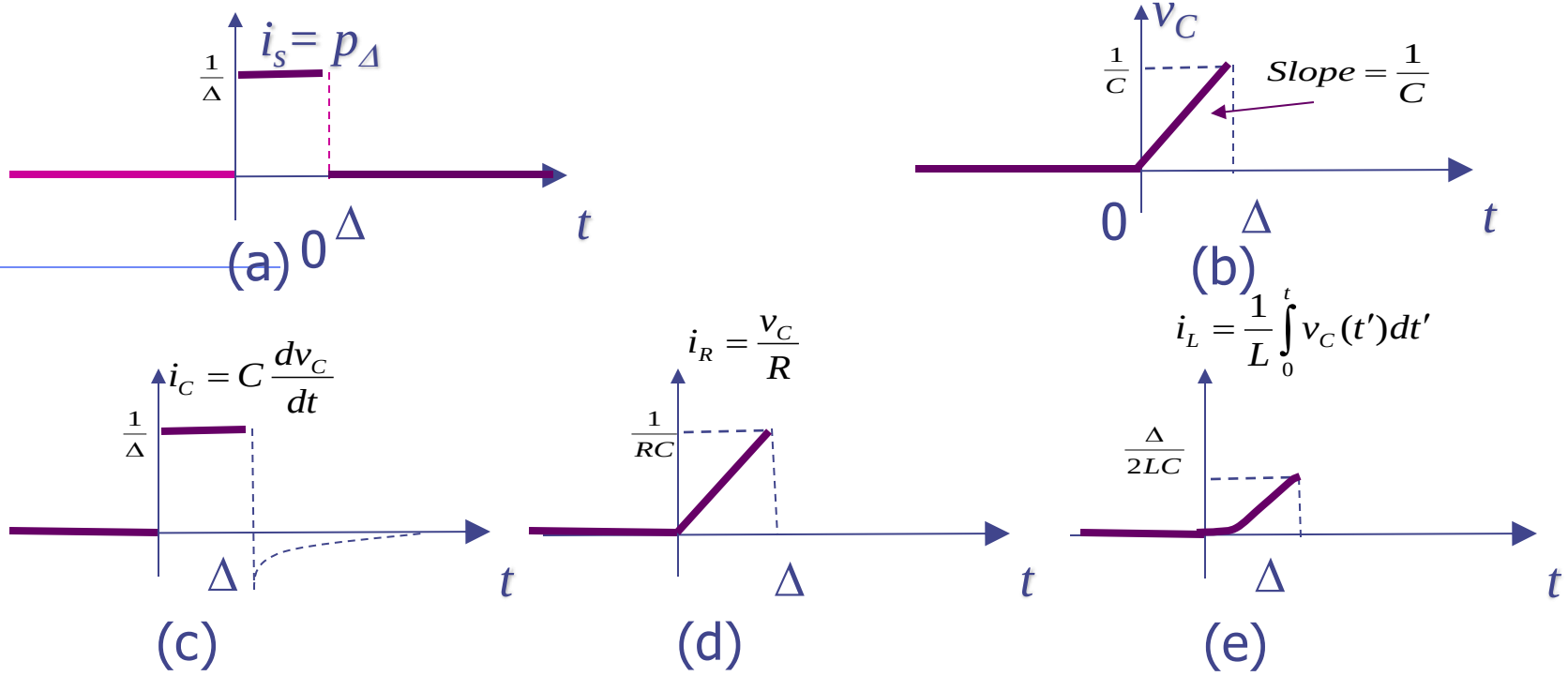

Fig.8.11 Physical explanation of impulse response of a parallel RLC circuit; p_Δ is the input pulse; the resulting v_C, i_C, i_R, and i_L are shown.

Let us assume that during the short interval $(0,\Delta)$ the slope of the voltage curve remains constant; then the voltage reaches 1/C at time Δ (Fig8.11b). The current through the resistor is proportional to the voltage v_C, and hence it is linear in t (Fig.8.1d). The inductor current, being proportional to the integral of v_L, is parabolic in t (Fig.8.11e). The current through the capacitor remains constant during the interval, as shown in Fig. 8.11c.

The State-space Approach

State equations and trajectory

Consider the same parallel circuit as was illustrated in Fig. 8.1. Let there be no current source input. Let us compute the zero-input response and let us use i_L and v_C as variables and rewrite (8.2) and (8.8) as follows:

$$\frac{di_L}{dt} = \frac{1}{L} v_C \quad t \geq 0 \tag{8.67}$$

$$\frac{dv_C}{dt} = -\frac{1}{C} i_L - \frac{G}{C} v_C \quad t \geq 0 \tag{8.68}$$

The variables v_C and i_L have great physical significance since they are closely related to the energy stored in the circuit. Equations (8.67) and (8.68) are first-order simultaneous differential equations and are called the *state equations* of the circuit. The pair of numbers $(i_L(t), v_C(t))$ is called the *state of the circuit at time t*. The pair $(i_L(0), v_C(0))$ is naturally called the initial state; it is given by initial conditions

$$i_L(0) = I_0$$
$$v_C(0) = V_0 \qquad (8.69)$$

From the theory of differential equations we know that the initial state specified by (8.69) defines uniquely, by Eqs. (8.67) and (8.68), the value of $(i_L(t), v_C(t))$ for all $t \geq 0$. Thus, if we consider $(i_L(t), v_C(t))$ as the coordinates of a point on the i_L-v_C plane, then, as t increases from 0 to ∞, the point $(i_L(t), v_C(t))$ traces a curve that starts at (I_0, V_0). The curve is called the *state-space trajectory*, and the plane (i_L, v_C) is called the *state space* for the circuit. We can present the pair of numbers $(i_L(t), v_C(t))$ as the components of a vector $\boldsymbol{x}(t)$ whose origin is at the origin of the coordinate axes; thus we write

$$\boldsymbol{x}(t) = \begin{bmatrix} i_L(t) \\ v_C(t) \end{bmatrix}$$

The vector $\boldsymbol{x}(t)$ is called the *state vector* or, briefly, the *state*. Thus, vector $\boldsymbol{x}(t)$ is a vector defined for all $t \geq 0$ in the state space. Its components, the current i_L through the inductor and the voltage v_C across the capacitor, are called the *state variables*. Knowing the state at time t that is the pair of numbers $(i_L(t), v_C(t))$ we can obtain the velocity of the trajectory $\left((di_L/dt)(t), (dv_C/dt)(t)\right)$ from the state equations.

Example 1

Consider the overdamped, underdamped and lossless cases of the parallel RLC circuit. Let the initial state be I_0=1 amp and V_0= 1 volt.

a. Overdamped. R=3 ohms, L=4 henrys, and C= 1/12 farad (α=2 and $\omega_0=\sqrt{3}$) Thus the natural frequencies are s_1=-1 and s_2=-3. From Eqs.(8.24) and (8.25) we obtain

$$i_L(t) = \tfrac{1}{8}\left(e^{-t} - e^{-3t}\right) + \tfrac{1}{2}\left(-e^{-3t} + e^{-t}\right) = \tfrac{13}{8}e^{-t} - \tfrac{5}{8}e^{-3t}$$

and

$$v_C(t) = \tfrac{1}{2}\left(e^{-t} - 3e^{-3t}\right) + 6\left(-e^{-3t} + e^{-t}\right) = \tfrac{13}{2}e^{-t} - \tfrac{15}{2}e^{-3t}$$

The waveforms are plotted in Fig.8.12a. Next we use t as a parameter, and plot for each value of t the state ($i_L(t)$,$v_C(t)$) in the state space., i.e., the plane with $i_L(t)$,as abscissa and $v_C(t)$ as ordinate. The result is shown in Fig.8.12b. Note that the trajectory starts at (1,1) when t=0 and ends at the origin when t=∞.

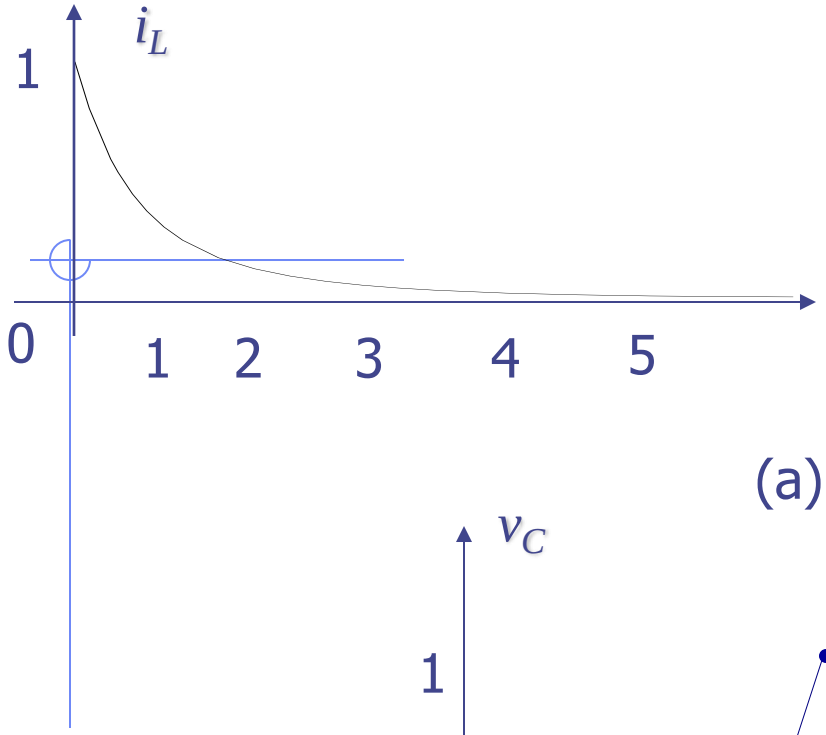

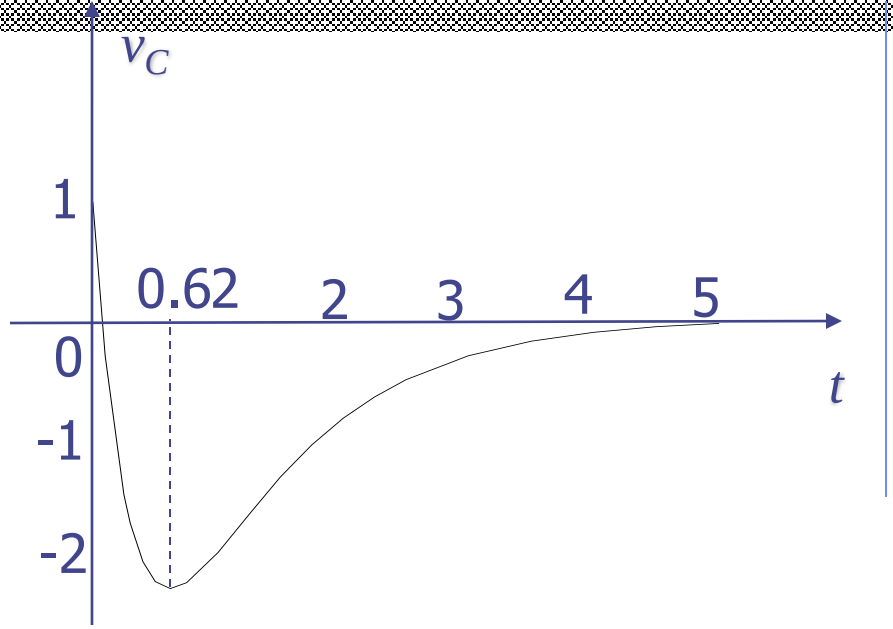

(a)

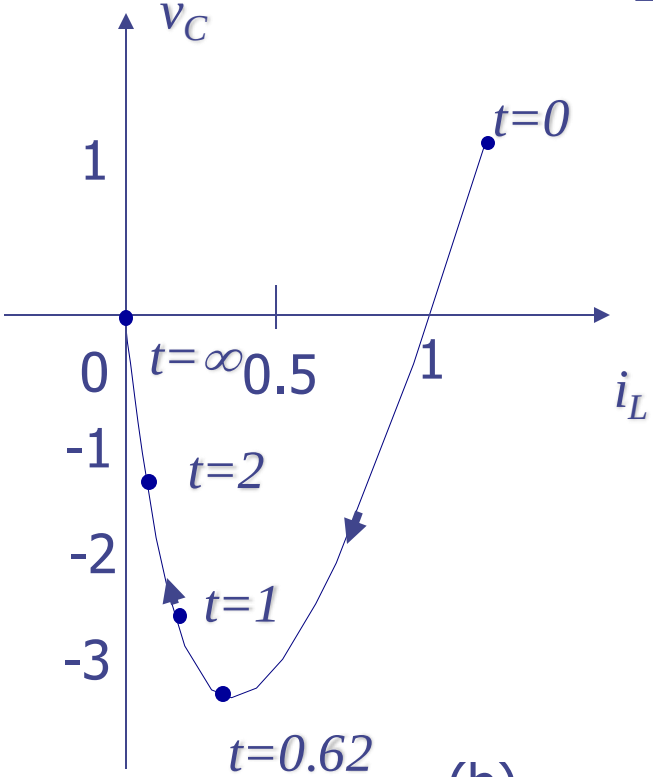

(b)

Fig.8.12 Overdamped parallel RLC circuit. (a) Waveform for i_L and v_C; (b) state trajectory

b. Underdamped. R=1 ohm, L=1henry and C=1 farad (α=2 and ω_0=1, and ω_d=$\sqrt{3}$/2). From Eqs.(8.24) and (8.25) we have

$$i_L(t) = e^{-t/2}\left(\cos\frac{\sqrt{3}}{2}t + \sqrt{3}\sin\frac{\sqrt{3}}{2}t\right) = 2e^{-t/2}\cos\left(\frac{\sqrt{3}}{2}t - 60^o\right)$$

and

$$v_C(t) = e^{-t/2}\left(\cos\frac{\sqrt{3}}{2}t - \sqrt{3}\sin\frac{\sqrt{3}}{2}t\right) = 2e^{-t/2}\cos\left(\frac{\sqrt{3}}{2}t + 60^o\right)$$

The waveforms are plotted in 8.13a, and the trajectory is plotted in Fig.8.13b. Note that the trajectory is a spiral starting at (1,1) and terminating at the origin.

b. Lossless. L=1/4 henry and C=1 farad (α=0 and ω_0=2). From Eqs.(8.24) and (8.25) we have

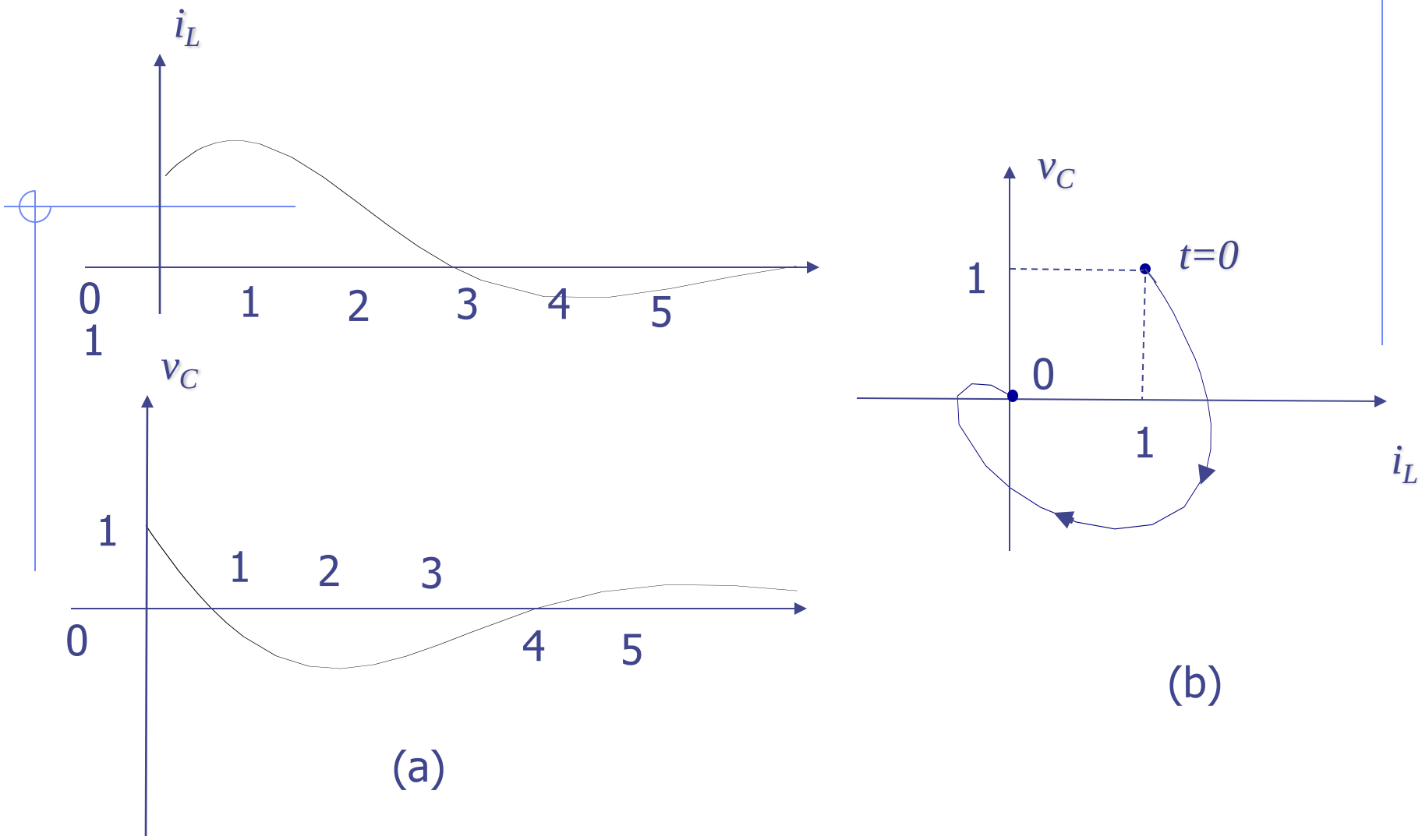

Fig.8.13 Underdamped parallel RLC circuit. Overdamped parallel RLC circuit. (a) Waveform for i_L and v_C; (b) state trajectory

$$i_L(t) = \cos 2t + \frac{1}{8}\sin 2t = 1.01\cos\left(2t - 7^o\right)$$

and

$$v_C(t) = \cos 2t + 8\sin 2t = 8.06\cos\left(2t + 83^o\right)$$

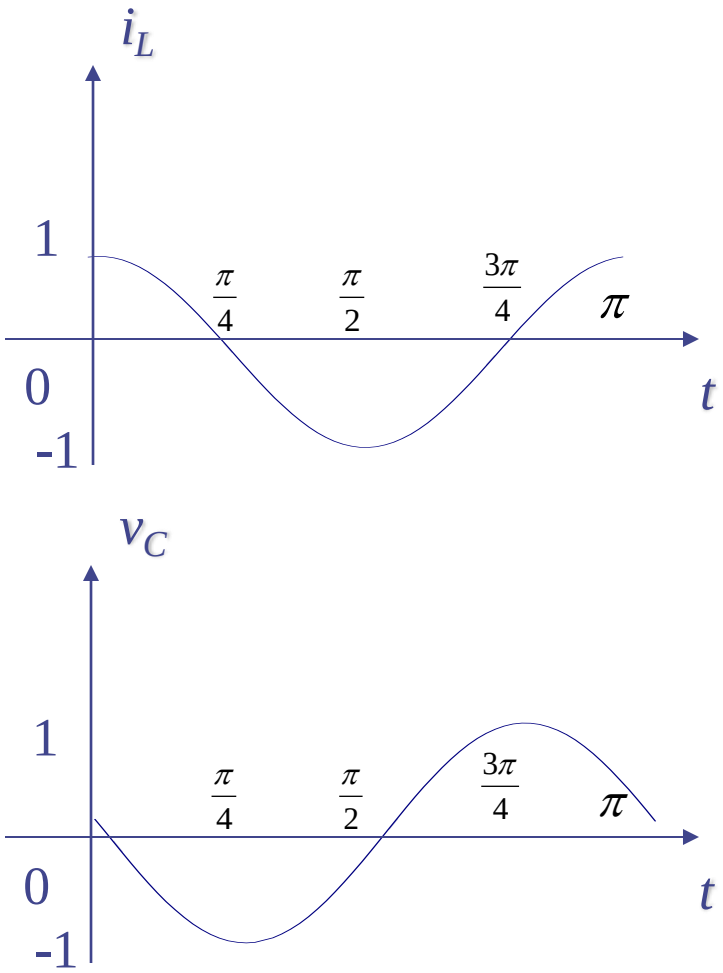

(a)

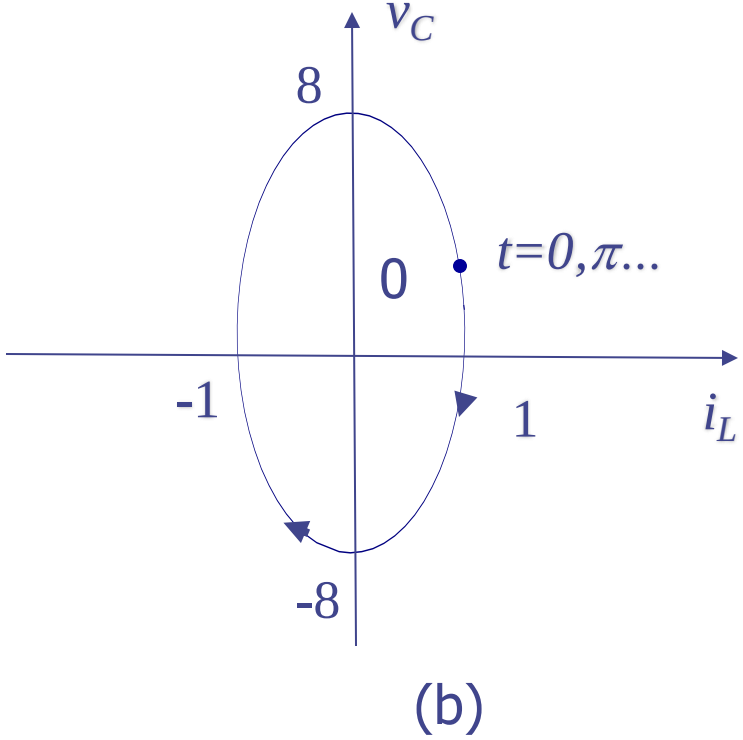

(b)

Fig. 8.14 Lossless parallel LC circuit

Matrix Representation

In terms of state variables, Eqs.(8.67) and (8.68) may be written in matrix form as follows:

$$\frac{dx(t)}{dt} = Ax(t) \quad t \geq 0 \tag{8.70}$$

and

$$x(0) = x_0 \tag{8.71}$$

where

$$A = \begin{bmatrix} 0 & \frac{1}{L} \\ -\frac{1}{C} & -\frac{G}{C} \end{bmatrix} \tag{8.72}$$

and

$$x_0 = \begin{bmatrix} I_0 \\ V_0 \end{bmatrix} \tag{8.73}$$

The matrix equations (8.70) and (8.71) are very similar to the scalar equations

$$\frac{dx}{dt} = ax \quad x(0) = x_0 \tag{8.74}$$

The scalar equation has the well known solution $x(t) = e^{at}x_0$

$$x(t) = e^{\mathbf{A}t}\mathbf{x}_0 \qquad t \geq 0 \tag{8.75}$$

where $e^{\mathbf{A}t}$ is a matrix that depends upon t and $\mathbf{A}$. Geometrically speaking, it maps the initial-state vector $\mathbf{x}_0$ into the state vector $\mathbf{x}(t)$ at time t. In fact, just as ordinary exponential e^{at} is given by the power series (valid for all t)

$$e^{at} = 1 + at + \frac{a^2t^2}{2!} + \frac{a^3t^3}{3!} + \ldots$$

the matrix $e^{\mathbf{A}t}$ is given by the power series (valid for all t)

$$e^{\mathbf{A}t} = \mathbf{I} + \mathbf{A}t + \mathbf{A}^2\frac{t^2}{2!} + \mathbf{A}^3\frac{t^3}{3!} + \ldots$$

where $\mathbf{I}$ is the unit matrix. In this last series each term is a matrix; hence

e^{At} is also a matrix. Each element of a matrix e^{At} is a function of t.

It is important to observe that (8.75) represents a linear function that maps the vector $\boldsymbol{x}_0$ (the initial-state vector) into the vector $\boldsymbol{x}(t)$ (the state vector at time t).

Approximate method for the calculation of the trajectory

With reference to Eqs.(8.70) and (8.71) we may view (8.70) as defining, for each t, the velocity $(d\boldsymbol{x}/dt)(t)$ along the trajectory at the point $\boldsymbol{x}(t)$ of the state space. In particular, given the initial state $\boldsymbol{x}(0)$, Eq.(8.70) gives the initial velocity of the state vector $(d\boldsymbol{x}/dt)(t)$. We may use a simple step-by-step method to compute an approximation to the trajectory. This method is based on the assumption that if a sufficiently small interval of time Δt is considered, then during that interval the velocity $d\boldsymbol{x}/dt$ is approximately constant; equivalently the trajectory is approximately a straight-line segment. Thus starting with the initial state $\boldsymbol{x}_0$ at time 0 we have

$$\frac{d\boldsymbol{x}}{dt}(0) = \boldsymbol{A}\boldsymbol{x}_0 \tag{8.76}$$

and since we assume the velocity to be constant during the small interval $(0,\Delta t)$,

$$\boldsymbol{x}(\Delta t) \approx \boldsymbol{x}_0 + \frac{d\boldsymbol{x}}{dt}(0)\Delta t = \boldsymbol{x}_0 + \boldsymbol{A}\boldsymbol{x}_0\Delta t \tag{8.77}$$

For the next interval, $(\Delta t, 2\Delta t)$, we again assume the velocity to be constant and calculate it on the basis of the approximate value of $\boldsymbol{x}(\Delta t)$ given by (8.77). Thus,

$$\frac{d\boldsymbol{x}}{dt}(\Delta t) = \boldsymbol{A}\boldsymbol{x}(\Delta t) \tag{8.78}$$

hence

$$\boldsymbol{x}(2\Delta t) \approx \boldsymbol{x}(\Delta t) + \boldsymbol{A}\boldsymbol{x}(\Delta t)\Delta t \tag{8.79}$$

We continue to calculate successive approximate values of the state

$$\begin{aligned}\boldsymbol{x}\left[(k+1)\Delta t\right] &\approx \boldsymbol{x}(k\Delta t) + \boldsymbol{A}\boldsymbol{x}(k\Delta t)\Delta t \quad k = 0,1,2,\ldots,N \\ &= (\mathbf{1} + \Delta t\boldsymbol{A})\boldsymbol{x}(k\Delta t)\end{aligned} \tag{8.80}$$

In practice, the value of Δt that should be selected depends

1. On number of significant figures carried in the computation
2. On the accuracy required
3. On the constants of the problem
4. On the length of the time interval over which the trajectory is desired

Once the trajectory is computed, the response of the circuit is easily obtained since it is either one component of the state or a linear combination of them.

Example 2

Let us employ the method to calculate the state trajectory of the under damped parallel RLC circuit in Example 1. The state equation is

$$\begin{bmatrix} \frac{dx_1}{dt} \\ \frac{dx_2}{dt} \end{bmatrix} = \begin{bmatrix} 0 & 1 \\ -1 & -1 \end{bmatrix} \begin{bmatrix} x_1 \\ x_2 \end{bmatrix}$$

$$\begin{bmatrix} x_1(0) \\ x_2(0) \end{bmatrix} = \begin{bmatrix} 1 \\ 1 \end{bmatrix}$$

Let us pick Δt=0.2 sec. We can use (8.77) to obtain the state at Δt ; thus

$$\begin{bmatrix} x_1(0.2) \\ x_2(0.2) \end{bmatrix} = \begin{bmatrix} 1 \\ 1 \end{bmatrix} + 0.2 \begin{bmatrix} 0 & 1 \\ -1 & -1 \end{bmatrix} \begin{bmatrix} 1 \\ 1 \end{bmatrix} = \begin{bmatrix} 1.2 \\ 0.6 \end{bmatrix}$$

Next the state at $2\Delta t$ is obtained from (8.79)

$$\begin{bmatrix} x_1(0.4) \\ x_2(0.4) \end{bmatrix} = \begin{bmatrix} 1.2 \\ 0.6 \end{bmatrix} + 0.2 \begin{bmatrix} 0 & 1 \\ -1 & -1 \end{bmatrix} \begin{bmatrix} 1.2 \\ 0.6 \end{bmatrix} = \begin{bmatrix} 1.32 \\ 0.24 \end{bmatrix}$$

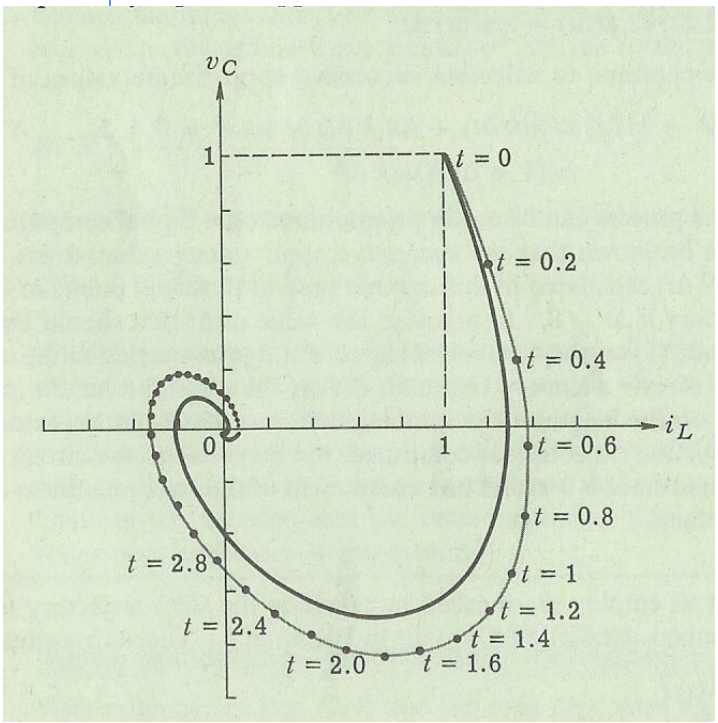

From (8.80) we can actually write the sate at $(k+1)\Delta t$ in terms of the state at $k\Delta t$ as

$$\mathbf{x}[(k+1)\Delta t] = \begin{bmatrix} 1 & 0.2 \\ -0.2 & 0.8 \end{bmatrix} \mathbf{x}(k\Delta t)$$

Fig.8.15 State trajectory calculation using the step-by step method for example 2 with Δt=0.2 sec.

Exercise

Compute the state trajectory by using

a) $\Delta t=0.1$ sec

b) $\Delta t=0.5$ sec

Remark

If we consider a parallel RLC circuit in which the resistor, inductor, and capacitor are nonlinear but time-invariant, then, under fairly general assumptions concerning their characteristics, we have equations of the form

$$\frac{di_L}{dt} = f_1(i_L, v_C) \qquad \frac{dv_C}{dt} = f_2(i_L, v_C) \tag{8.81}$$

where the functions f_1 and f_2 are obtained in terms of the branch characteristics.

It is fundamental to note that the general method of obtaining the approximate calculation of the trajectory still holds; the equations are

$$\frac{d\mathbf{x}(t)}{dt} = \mathbf{f}\left(\mathbf{x}(\Delta t)\right) \tag{8.82}$$

And the equations corresponding to (8.77) and (8.79) are now

$$\mathbf{x}(\Delta t) \approx \mathbf{x}_0 + \mathbf{f}(\mathbf{x}_0)\Delta t \quad \mathbf{x}(2\Delta t) \approx \mathbf{x}(\Delta t) + \mathbf{f}\left(\mathbf{x}(\Delta t)\right)\Delta t \tag{8.83}$$

State Equations and Complete Response

If the parallel RLC circuit is driven by a current source as in Fig.8.5, the stat equations can be similar written. First, the voltage across the parallel circuit is the same as if there were no source. We obtain, as in Eq. (8.67),

$$\frac{di_L}{dt} = \frac{1}{L} v_C$$

Next for the KCL equation we must include the effect of the current source. Thus, an additional term is needed in comparison with Eq. (8.68), and we have

$$\frac{dv_C}{dt} = -\frac{1}{C} i_L - \frac{G}{C} v_C + \frac{i_s}{C}$$

The initial state, the same as given by Eq. (8.69)

$$i_L(0) = I_0$$
$$v_C(0) = V_0$$

If we use the vector $\boldsymbol{x}$ to denote the state vector, that is, $\boldsymbol{x} = \begin{bmatrix} i_L \\ v_C \end{bmatrix}$ the state equation in matrix form is

$$\frac{d\boldsymbol{x}}{dt} = \boldsymbol{A}\boldsymbol{x} + \boldsymbol{b}w \tag{8.84}$$

and the initial state is

$$\boldsymbol{x}(0) = \begin{bmatrix} i_0 \\ v_0 \end{bmatrix} \tag{8.85}$$

In (8.84)

$$\boldsymbol{A} = \begin{bmatrix} 0 & \frac{1}{L} \\ -\frac{1}{C} & -\frac{G}{C} \end{bmatrix} \tag{8.86}$$

and

$$\boldsymbol{b}w = \begin{bmatrix} 0 \\ \frac{1}{C} \end{bmatrix} i_s \tag{8.87}$$

The matrices $\boldsymbol{A}$ and $\boldsymbol{b}$ depend upon the circuit elements, whereas the input is denoted by w. Equation (3.18) is a first-order nonhomogeneous matrix differential equation and is similar to the first-order scalar nonhomogeneous linear differential equation

$$\frac{dx}{dt} = ax + bw \tag{8.88}$$

The solution of this scalar equation, satisfying the specified initial condition $x(0) = x_0$, is

$$x = e^{at}x_0 + \int_0^t e^{a(t-t')}bw(t')dt' \tag{8.89}$$

Note that the complete response is written as the sum of two terms.

The first term, $e^{at}x_0$, is the zero-input response, and the second term, which is represented by the integral, is the zero-state response.

Similarly matrix equation (8.84) has the solution

$$\boldsymbol{x} = e^{\boldsymbol{A}t}\boldsymbol{x}_0 + \int_0^t e^{\boldsymbol{A}(t-t')}\boldsymbol{b}w(t')dt' \tag{8.90}$$

The first term, $e^{\boldsymbol{A}t}\boldsymbol{x}_0$ is the zero-input response, and the second term, which is represented by the integral, is the zero-state response.